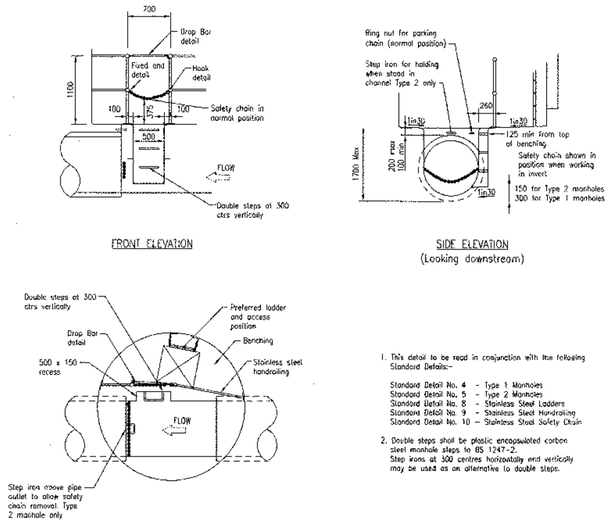

FRONT ELEVATION

SIDE ELEVATION
(Looking downstream)

PLAN

1. This detail to be read in conjunction with the following Standard Details:-

   Standard Detail No. 4 - Type 1 Manholes
   Standard Detail No. 5 - Type 2 Manholes
   Standard Detail No. 8 - Stainless Steel Ladders
   Standard Detail No. 9 - Stainless Steel Handrailing
   Standard Detail No. 10 - Stainless Steel Safety Chain

2. Double steps shall be plastic encapsulated carbon steel manhole steps to BS 1247-2. Step irons at 300 centres horizontally and vertically may be used as an alternative to double steps.

STANDARD DETAIL No.7
STANDARD INVERT ACCESS DETAILS FOR TYPE 2 MANHOLES AND TYPE 1 WHERE THE SEWER IS 750mm DIAMETER OR GREATER

Formerly Drg No 0000/256/W007

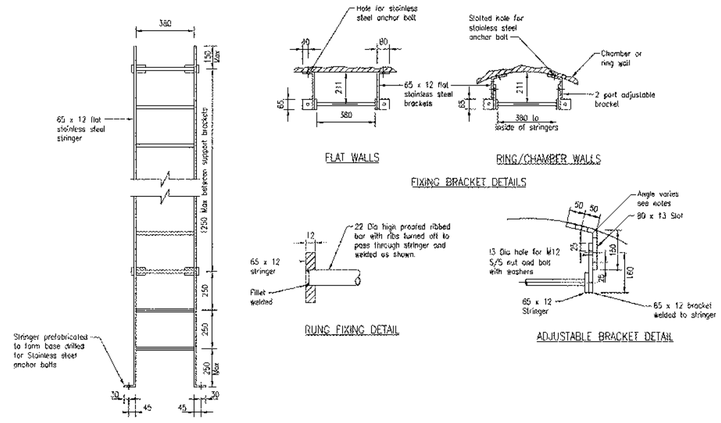

STAINLESS STEEL LADDER DETAIL

FLAT WALLS

RING/CHAMBER WALLS

FIXING BRACKET DETAILS

RING FIXING DETAIL

ADJUSTABLE BRACKET DETAIL

1. All dimensions in millimetres.
2. All components to be fabricated in Stainless steel Grade 316 Cr 18 Ni 10 Mo 17-12-2 to BS EN 10088: Part 1.
3. The two piece adjustable bracket has been detailed to ensure that the distance between the shaft wall and the centre line of the ring is 211, at the mid span of the ring for all shaft diameters.
4. The angle of the proportion the bracket takes to the manhole wall varies with chamber diameter. The angles required are as follows:-

CHAMBER DIA	ANGLE OF BRACKET
900	112.7
1050	108.1
1200	106.5
1350	104.6
1500	103.0
1800	100.7
2100	99.1
2400	98.0
2700	97.0
3000	96.2

5. Ladder stringers to be one of continuous length with no joints.
6. All welds shall be 6mm Fillet welds unless shown otherwise.
7. All bolts into concrete to be Stainless steel expanding anchor type.
8. Where access is via intermediate slabs/platforms the top of the ladder shall terminate 1250 above slab/platform level.

STANDARD DETAIL No.8
STANDARD SOLID STAINLESS STEEL LADDER AND FIXINGS

Formerly Drg No 0000/254/W008

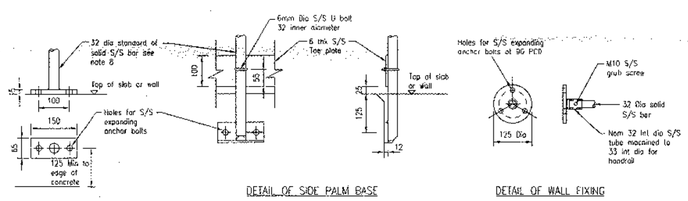

DETAIL OF FLAT BASE

DETAIL OF SIDE PALM BASE

DETAIL OF WALL FIXING

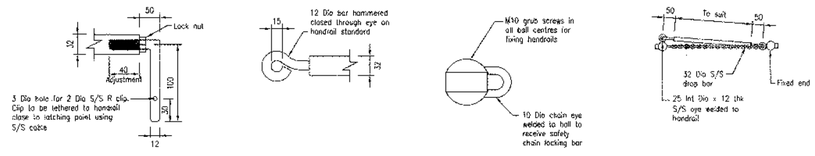

OPEN HOOK DETAIL

CLOSED HOOK DETAIL

BALL DETAIL - PLAN VIEW

DROP BAR DETAIL

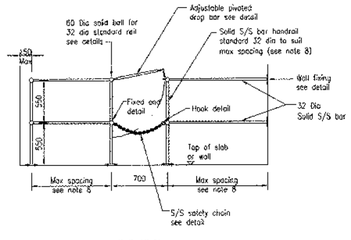

ELEVATION

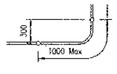

CORNER DETAIL

1. All dimensions in millimetres.
2. All components to be fabricated in Stainless steel Grade 316 Cr 18 Ni 10 Mo 17-12-2 to BS EN 10088: Part 1.
3. All fixing bolts to be a minimum of 125mm from edges of concrete.
4. All handrailing joints to be formed within the balls.
5. Handrails to be fixed within balls by the use of an M10 stainless steel grub screw.
6. All bends in handrailing must be machine formed.
7. All welds shall be 6mm Fillet Welds.
8. Max spacing of 32mm dia handrail standards to be 1240mm.
9. Side palm base for handrail standards not to be used at manhole benching level.
10. 100 min height stainless steel toe plate required if side palm handrail standards used.
11. Kicker plates to be installed on all intermediate landings and on benching where invert to benching is greater than 2m.

STANDARD DETAIL No.9
STANDARD SOLID STAINLESS STEEL HANDRAILING

Formerly Drg No 0000/254/W009

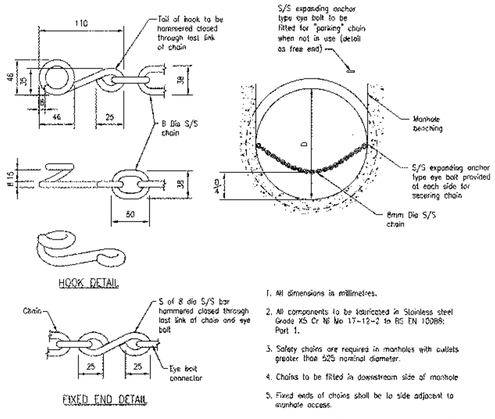

1. All dimensions in millimetres.
2. All components to be fabricated in Stainless steel Grade 316 Cr 18 Ni 10 Mo 17-12-2 to BS EN 10088: Part 1.
3. Safety chains are required in manholes with outlets greater than 525 nominal diameter.
4. Chains to be fitted in downstream side of manhole
5. Fixed ends of chains shall be to side adjacent to manhole access.
6. Normal operational position for safety chains is in the parked position (parking eye bolt).
7. Attention is drawn to the fact that the bolt fixings for the safety chain are the safety bolt type fixing.

STANDARD DETAIL No.10
STANDARD SOLID STAINLESS STEEL SAFETY CHAINS AND FIXINGS

Formerly Drg No 0000/254/W010

CIVIL / STRUCTURAL DESIGN RISK MANAGEMENT

Abnormal or unusual residual risks associated with the design outcomes shown on this drawing are:-

RSK LDE LTD has followed its Design Risk Management process for Hazard Elimination and Risk reduction in developing the designs shown on this drawing.
Abnormal or unusual residual risks may be shown above where it is considered that such risk may not normally be expected by competent persons engaged on work of this nature or type.

Rev.	Date	Amendment	Drawn	Chkd.	Appd.
P1	26.03.12	Issued for approval	CB	PW	IC

LAND & DEVELOPMENT ENGINEERING LTD
Spring Lodge
172 Chester Road
Helsby
Cheshire. WA6 0AR
United Kingdom
Tel: +44 (0) 1928 726006
Fax: +44 (0) 1928 725830
Email: lde@rsk.co.uk
Web: www.rsk.co.uk

Client: Taylor Wimpey (Manchester) Ltd

Project Title: Calderstones Phase 3

3201206 40P

Drawing Title: Drainage Construction Details. Sheet 4 of 4 Ladder, Handrailing & Safety Chains

Drawn	Date	Checked	Date	Approved	Date
CB	March 12	PW	March 12	ISC	March 12

Scale	Orig Size	Dimensions
NTS	A1	

Project No. 880209

Drawing File

Drawing No. 11-04

Rev. P1

File Location: L:\001 JOBS LIVE\880209 - CALDERSTONES PH3 DESIGN\GRAPHIX\INFRASTRUCTURE\DESIGN DRAWINGS\DRAINAGE CONSTRUCTION DETAILS.DWG