This drawing is to be read in conjunction with all relevant Architect, consultants' and specialists' drawings and specifications. The Architect is to be notified of any discrepancies before proceeding. Do not scale from this drawing. All dimensions and levels are to be checked on site. This drawing is subject to copyright. All work carried out before Planning and Building Permission has been granted is at the contractor/clients risk.

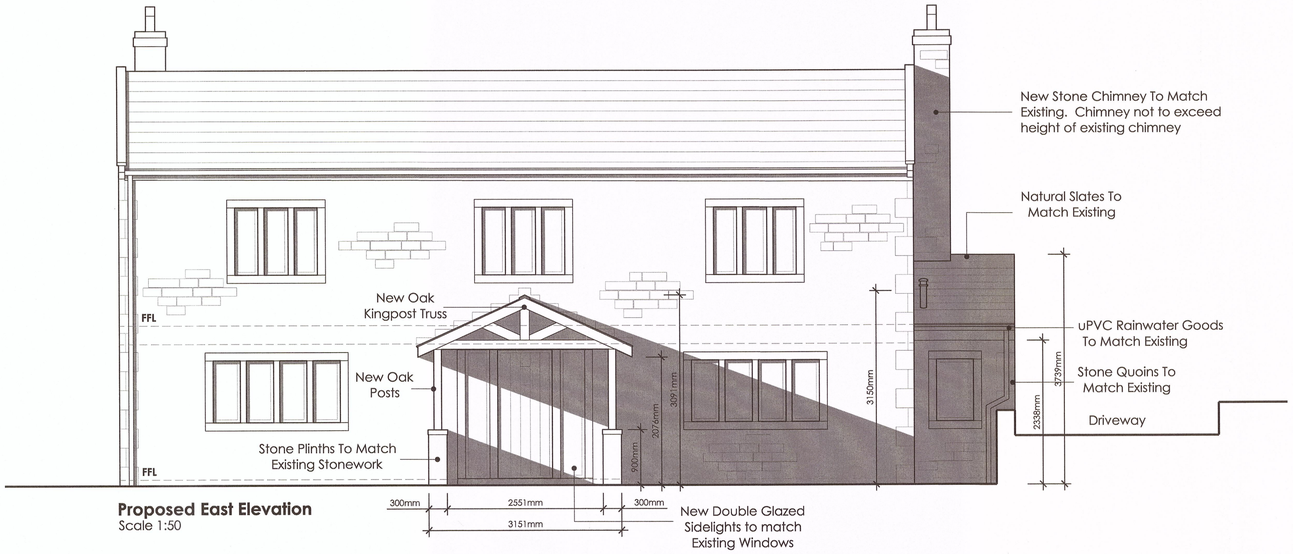

Proposed East Elevation
Scale 1:50

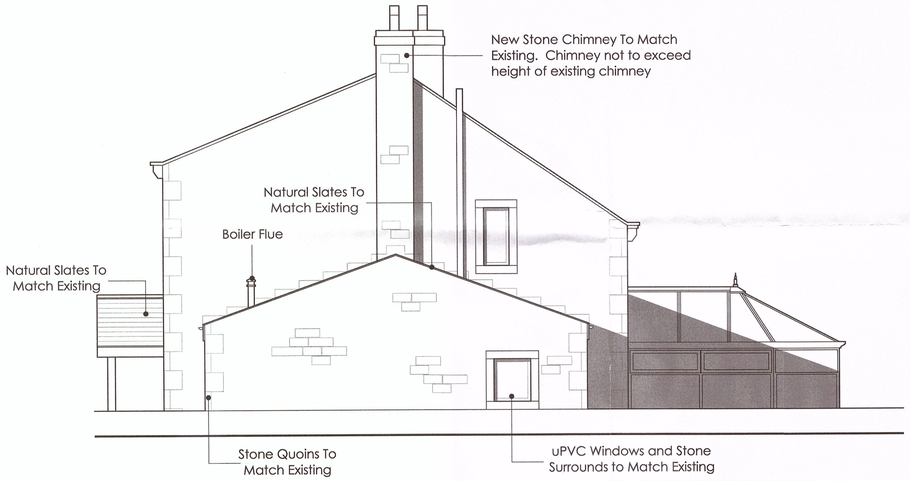

Proposed North Elevation
Scale 1:50

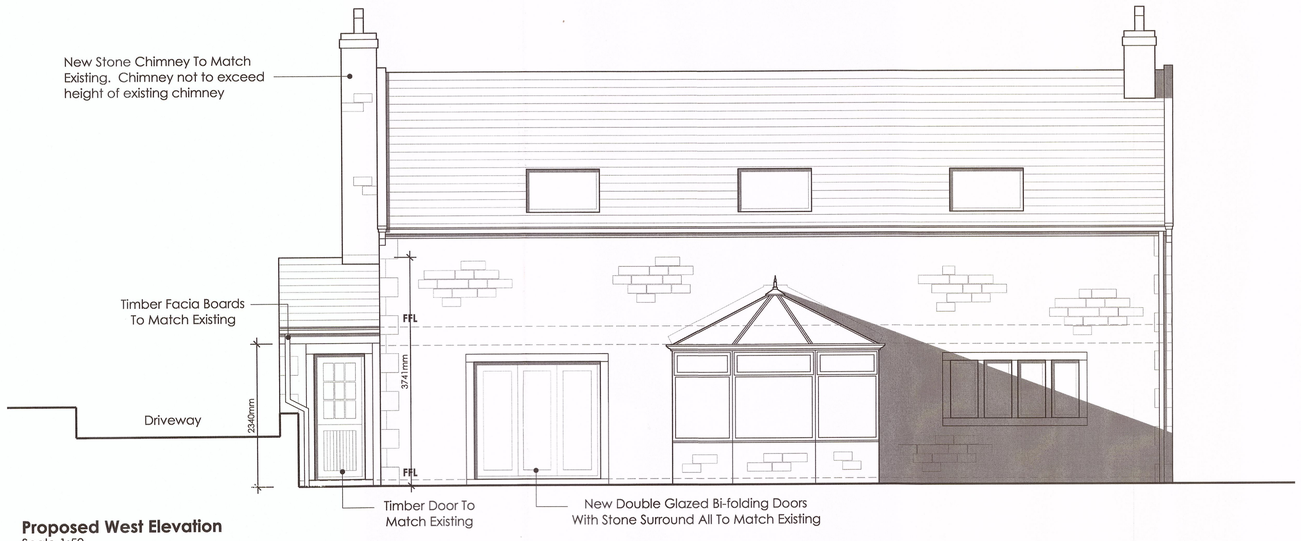

Proposed West Elevation
Scale 1:50

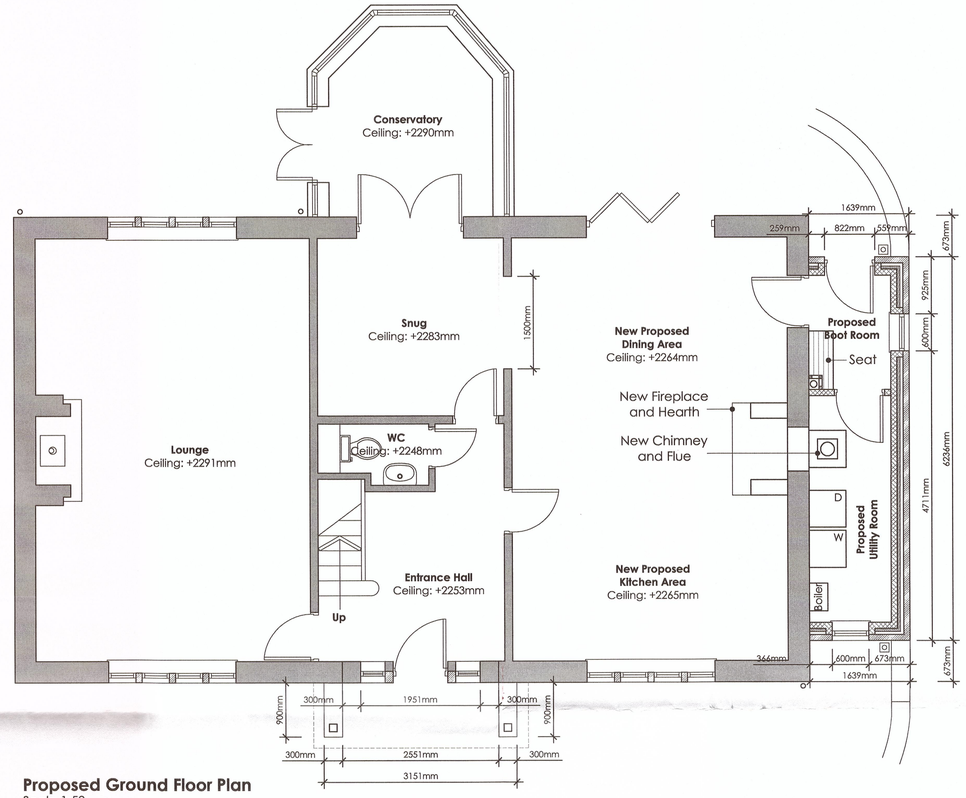

Proposed Ground Floor Plan
Scale 1:50

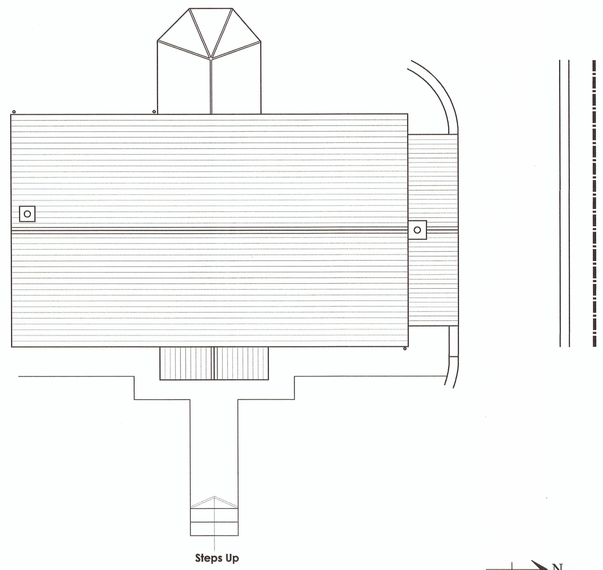

Proposed Part Site Plan
Scale 1:100

320150399P

0 1 2 3m

no.	by	chk.	revision	date
A	MF	-	Revised in line with client comments	08.04.2015

Client
Mr C Stansfield

Job Title
Proposed Extension And Alterations To
Foxgloves
Back Lane
Grindleton
Lancashire
BB7 4RW

Drawing Title
Proposed Ground Floor Plan And Elevations

Scale	Date	Drawn
As Indicated	March 2015	MF

spa ARCHITECTS
SUNDERLAND PEACOCK
SUNDERLAND PEACOCK & ASSOCIATES LTD.
HAZELMERE, PIMLICO ROAD, CLITHEROE
LANCASHIRE, BB7 2AG
T 01200 423178 F 01200 427328
E info@sunderlandpeacock.com
www.sunderlandpeacock.com

4780 - 02 A