DO NOT SCALE – IF IN DOUBT, ASK!

ALL STEELWORK TO BE GALVANIZED.

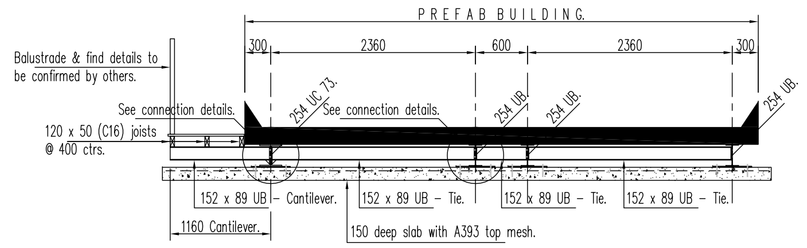

Section X – X, (1:50).

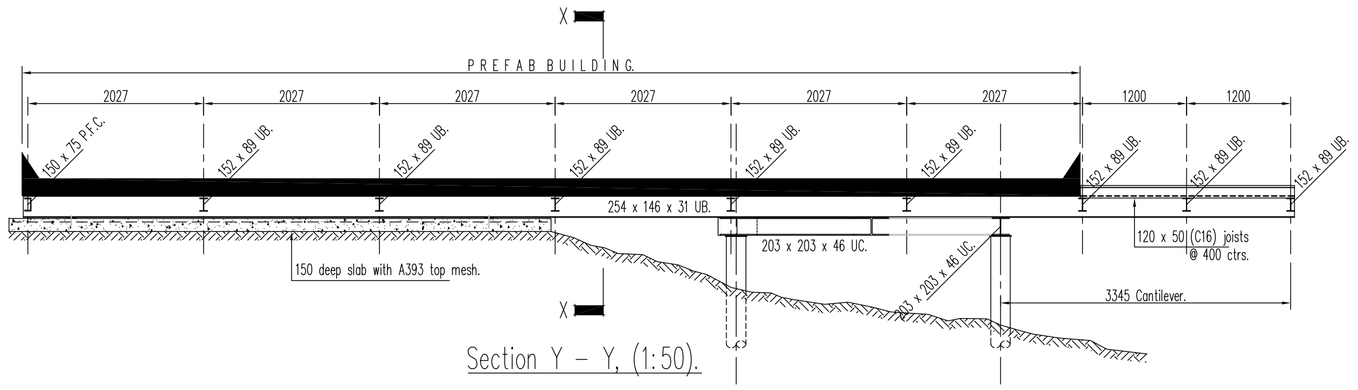

Section Y – Y, (1:50).

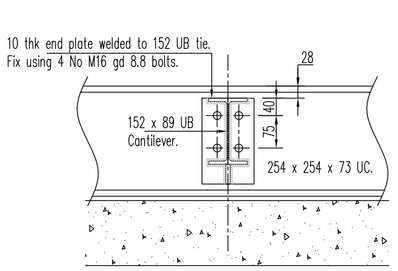

Section 1 – 1, (1:10).

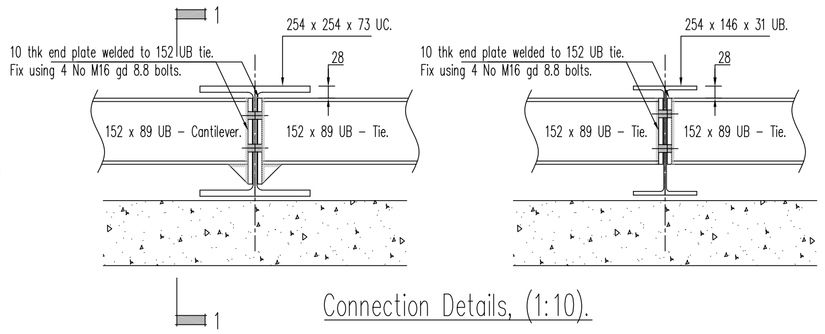

Connection Details, (1:10).

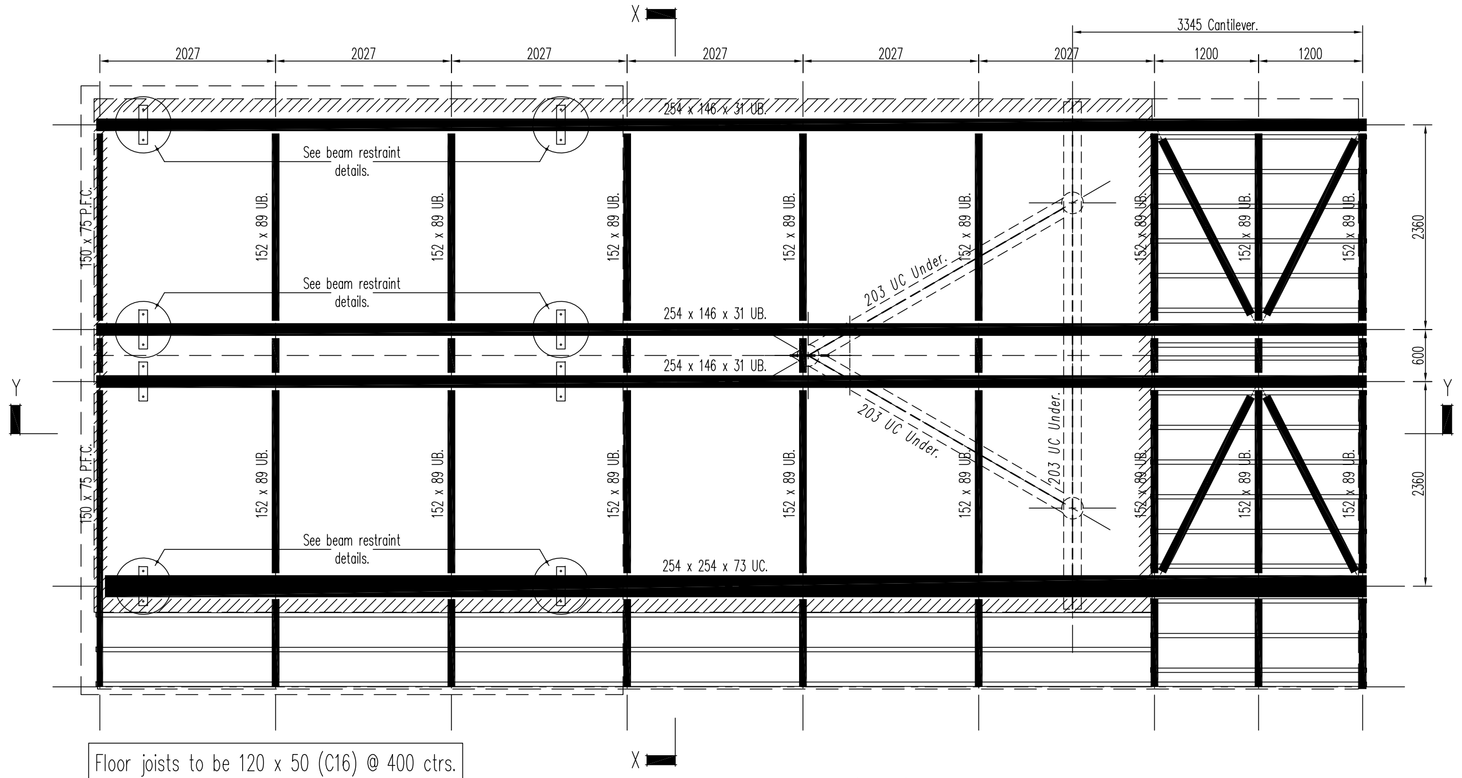

Floor joists to be 120 x 50 (C16) @ 400 ctrs.

Pre-Fab Support Rail Layout, (1:50).

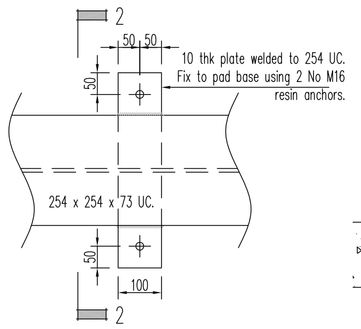

Beam Restraint Details, (1:10).

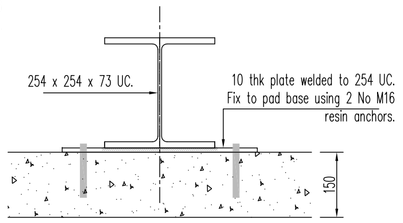

Section 2 – 2, (1:10).

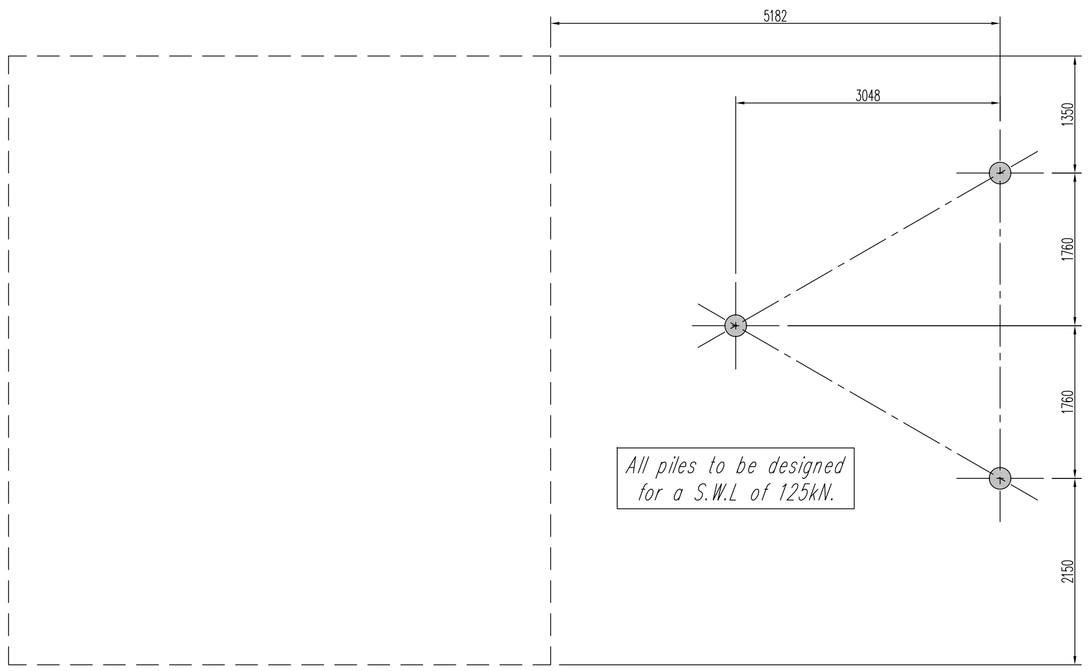

Pile Setting-Out Layout, (1:50).

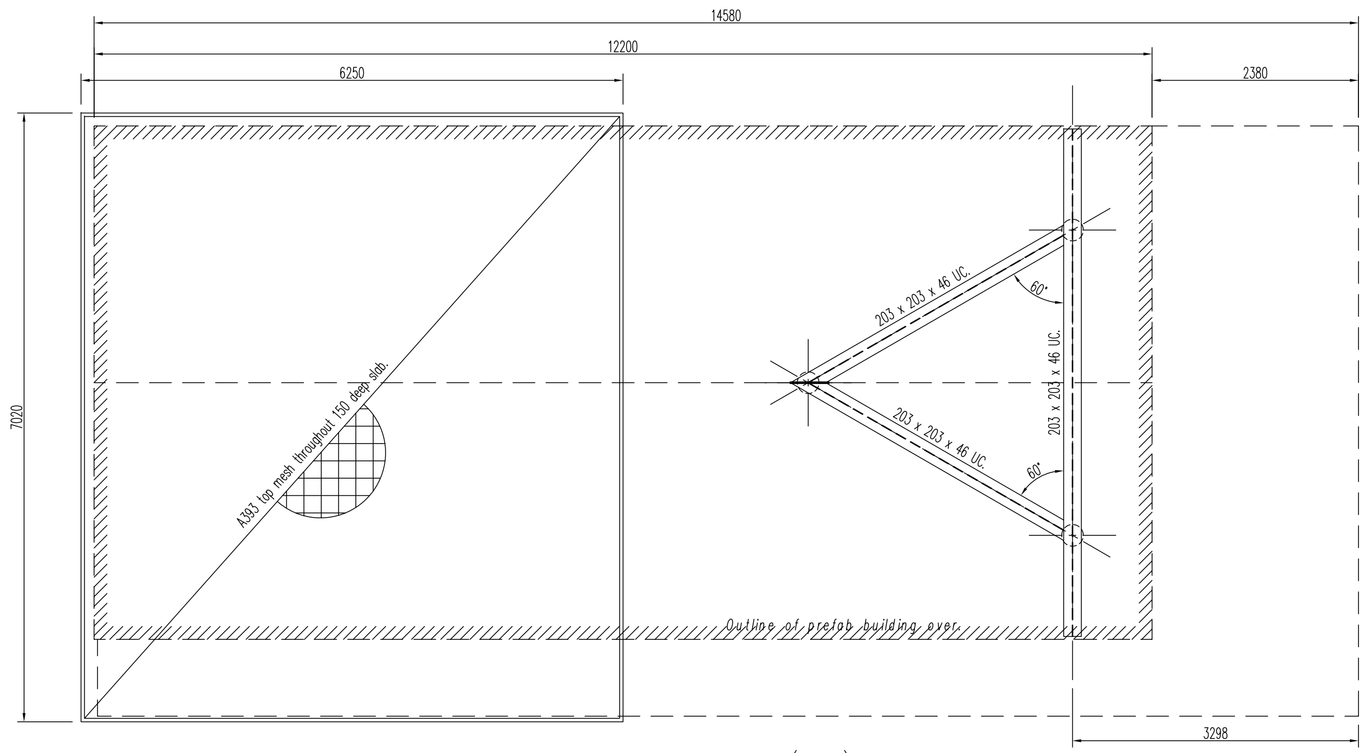

Pad Base Layout, (1:50).

Steelwork Notes.

This drawing to be read in conjunction with the architects drawings and specifications.

Steelwork to comply with the requirements of BS.5950: Parts 1 and 2 as appropriate and the structural engineers specification.

Steel to be grade S275 unless noted otherwise and be in accordance with BS.4360.

Section sizes shown are serial sizes, for exact sizes refer to BCSA/SCI handbook. Sections to comply with BS.4848 and BS.4.4

Cold-formed sections shall comply with BS.5950: parts 5 and 7. section to be supplied with all necessary fixings, ancillaries etc. and fixed in strict accordance with the manufacturers instructions. Anti-sag rods/struts to be installed prior to fixing of any cladding.

Unless noted otherwise all connections to have 2-no. M16 bolts, Grade 8.8, min.

All welds to be 6mm fillet weld, full profile, unless noted otherwise.

Where any design of the structure (or part thereof) has been carried out by the steelwork contractor, copies of the calculations and details to be submitted for approval prior to fabrication.

Steelwork contractor to provide all fabrication drawings for approval prior to fabrication. The steelwork contractor is responsible for the accuracy of all his shop drawings. Approval of the drawings etc. shall not relieve him of his responsibility.

Steelwork contractor to provide and fix all necessary temporary bracing as required to ensure stability of the frame during erection. Steelwork contractor to submit his method statement of erection, for approval, prior to commencement of any work on site.

Holding down bolt assemblies shall be supplied by the steelwork fabricator, with a copy of the foundation bolt layout, to the contractor for casting into the foundations. Foundation bolts to be held firmly in position during all setting in operations. Care to be taken to ensure that full movement tolerances can be achieved and all bolts, threads, nuts, etc. are adequately protected.

Cement based grout for bedding of steel bases shall be as follows:
Fluid portland cement mortar – the mortar shall not be leaner that 1:1 cement to fine aggregate (sand) and shall be mixed as thickly as possible consistent with fluidity. The mortar shall be poured under a suitable head and tamped until the space is completely filled. a proprietary expanding grout may be used as an alternative subject to approval.

No grouting shall be carried out until a sufficient portion of the structure has been aligned, levelled, plumbed and braced. All water debris etc. to be removed prior to grouting.

Surface preparation of steelwork shall be in accordance with BS.5493 and unless noted otherwise blast cleaning shall comply with BS.4232. The steel shall be blast cleaned to grade SA.2.5 in accordance with BS.7079.

Protective treatment:
Blast clean before fabrication. Following blast cleaning the steelwork is to be treated by painting with 1-coat zinc phosphate alkyd high-build primer, 20 microns dft. Primer allowed to dry for 24 hrs prior to fabrication. After fabrication all damaged areas to be made good and the steelwork cleaned. Apply a single coat, 60 microns dft, of the primer immediately after cleaning.

Intumescent paint providing one hours fire resistance shall be applied where appropriate as indicated on the Architect drawings. All painting shall comply with the appropriate British Standard and be applied in accordance with the manufacturers instructions.

All steelwork below ground to be encased in 100mm thk minimum C20 concrete as follows: Concrete grade C20; nominal size of aggregate 20mm maximum; sand and coarse aggregates to comply with BS.882. All-in aggregates are not permitted. Cement to be 'PC' and conform to BS.12, Minimum cement content 180kg/m³. Maximum free water/cement ratio 0.80.

Beam Notation:–

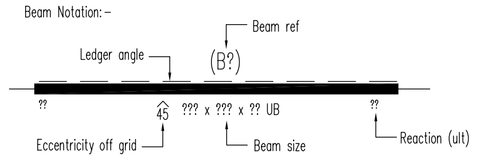

rev	description	date	by
C			
B			
A			

Project
BUILDING THEMES INTERNATIONAL (BTI).
PENDLE VIEW FISHERIES, CLITHEROE.

Drawing Title
PROPOSED LODGE SUPPORTS.

Date	Scale	Drawn by	Checked by
Dec-2015	1:50	HWF/GW	–

Job No.	Drg. No.	Size	Revision
CF-7729	001	A1	–

Carr Faulkner Associates

Consulting Civil & Structural Engineers
1 St Marys Walk
Chorley,
Lancashire.
PR7 2RT
Tel: 01257 244600
Fax: 01257 231678
E-Mail:
engineers@carrfaulkner.co.uk

© Copyright reserved Carr Faulkner Associates Limited 2015.