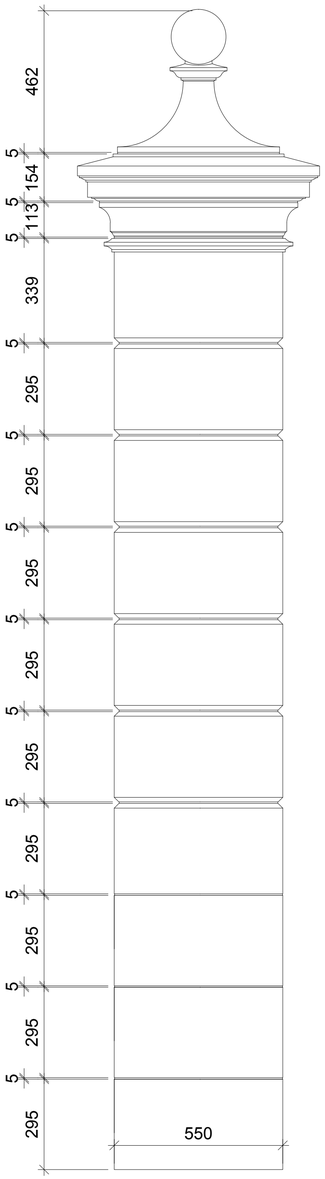

EAST ELEVATION - ENTRANCE PILLAR (TO BE STRUCTURALLY TIED TO WALL)
SCALE 1:10

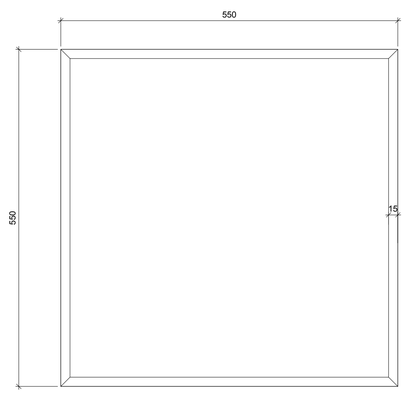

EAST ELEVATION - ENTRANCE CROSS SECTION
SCALE 1:5

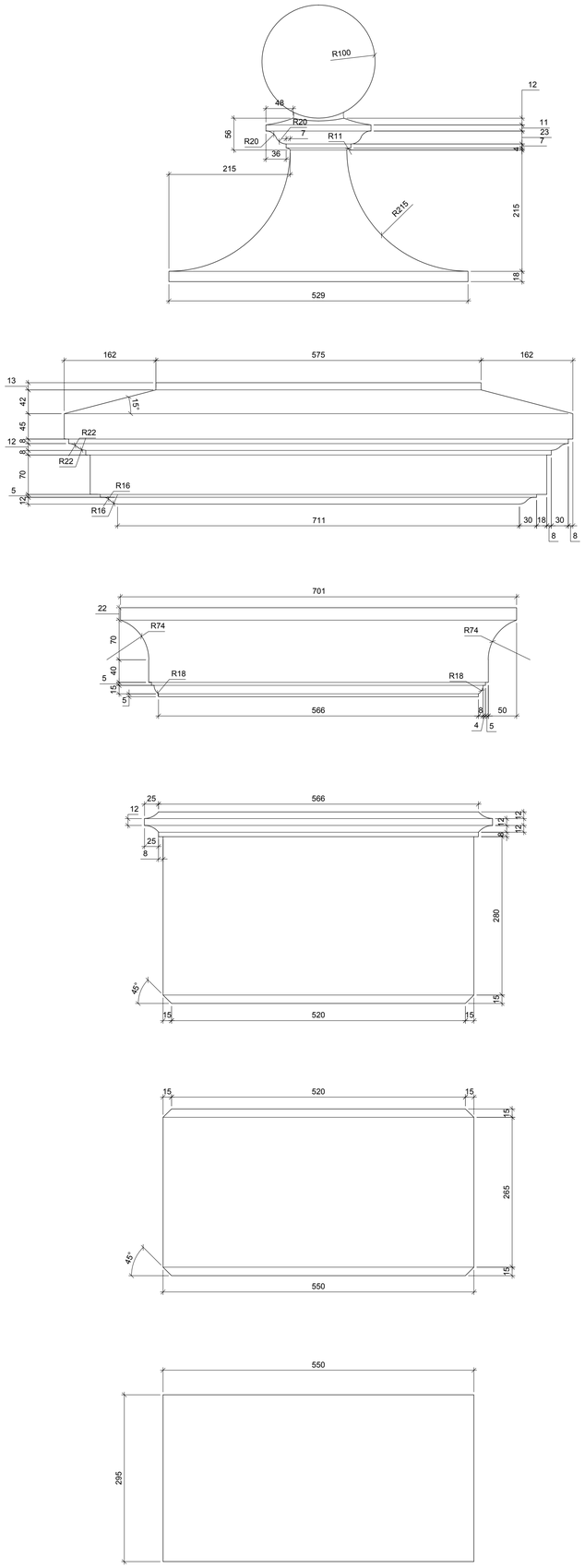

EAST ELEVATION - ENTRANCE DETAILS
SCALE 1:5

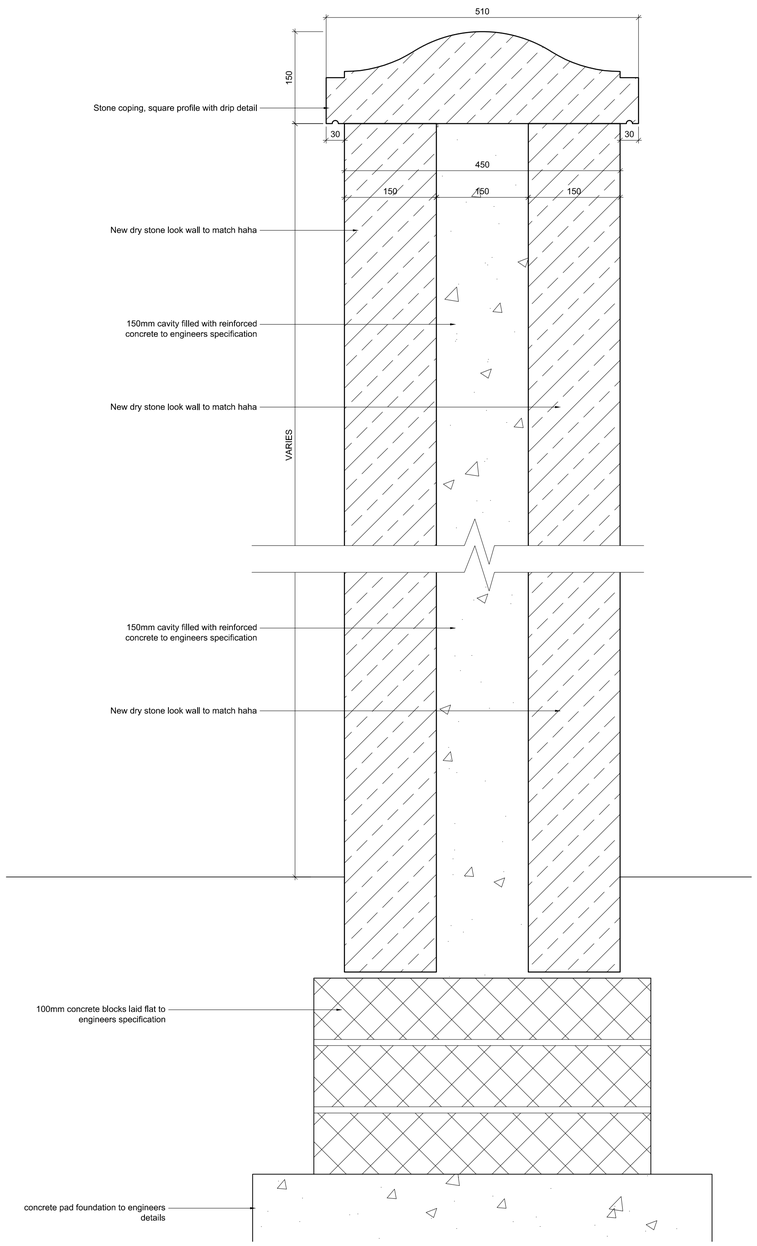

TYPICAL WALL SECTION
SCALE 1:5

NOTES

- All dimensions and levels are to be checked on site.
- Any discrepancies are to be reported to the Shaw & Jagger Architects Ltd before any work commences.
- This drawing shall not be scaled to ascertain any dimensions. Work to figured dimensions only.
- This drawing shall not be reproduced without express written permission from Shaw & Jagger Architects Ltd.
- Title overlay drawings and ownership boundaries are produced using all reasonable endeavors. Shaw & Jagger Architects Ltd cannot be responsible for the accuracy or scale discrepancy of base plans supplied to them.

rev	date	drawn	checked
A	09/11/16	JR	EJ
COPING DESIGN AMENDED			

drawing stage: CONSTRUCTION

drawing status: INFORMATION

client: MR & MRS BOVINGDON

project: NEW HALL
PENDLETON ROAD
WISWELL

drawing title: WALLED GARDENS
STONEWORK DETAILS
SHEET 2

date: OCT '16 drawn: SP
scale: AS NOTED@A1 checked: JR

SHAW & JAGGER ARCHITECTS
14 - 15 Regent Parade
Harrogate
North Yorkshire
HG1 5AW
Tel: 01423 532950
info@shawandjagger.com
www.shawandjagger.com

Job No 137/01 DWG No (90)016 Rev A