Revision --

DRAWING No. A018/140/P/05

DO NOT SCALE DIMENSIONS FROM DRAWING

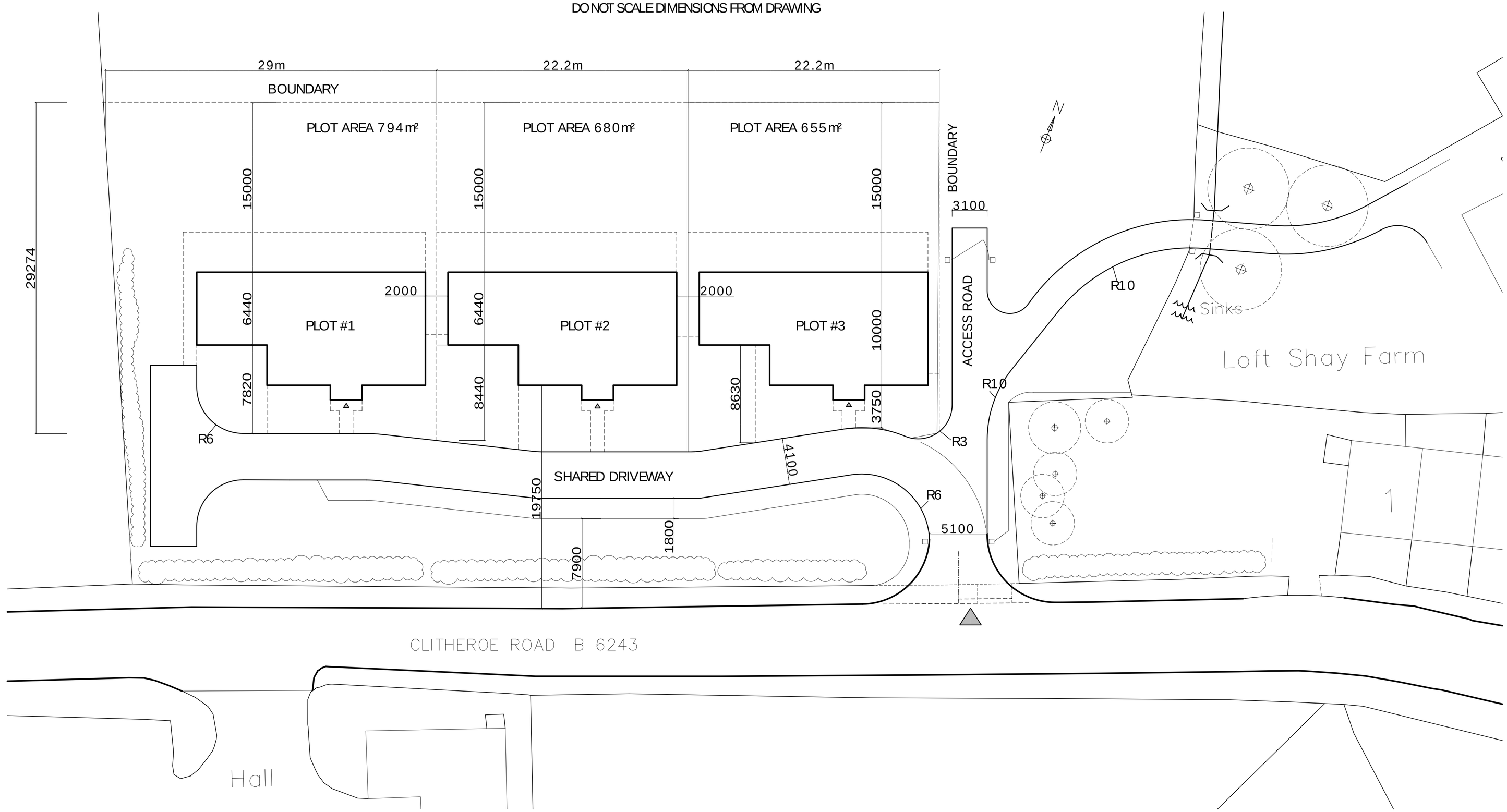

BASIC SITE DIMENSIONS SCALE 1:200

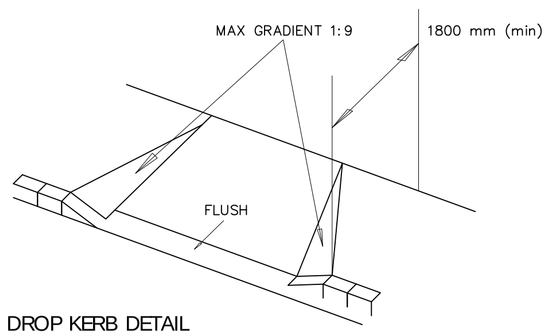

DROP KERB DETAIL

CARRIAGEWAY SPECIFICATION

25mm CLOSE GRADED WEARING COURSE TO BS 4987 PRT 1
10mm Agg 200 PEN

50mm OPEN GRADED BASE COURSE TO BS 4987
20mm Agg 200 PEN LAID ON TAC COAT

70mm DENSE BITUMINOUS MACADAM ROAD BASE TO BS 4987
40mm AgG 150 PEN

225mm SUB BASE DTp TYPE 1 GRANULAR MATERIAL

FOOTWAY SPECIFICATION

20mm THK SURFACE COURSE
MEDIUM GRADED 6mm Agg
45mm THK BINDER COURSE
100mm SUB BASE TYPE 1 GRANULAR MATERIAL
OPEN GRADED
200mm thk SUB BASE AT VEHICULAR CROSSINGS

BLOCK PAVING SPECIFICATION

80mm CONCRETE POROUS PAVING
50mm - 6mm SINGLE SIZED WASHED AGGREGATE
150mm - 20mm WASHED AGGREGATE GRADE D
160mm SUB BASE DTp TYPE 1 GRANULAR MATERIAL
350mm 6F2 CAPPING LAYER SELECTED GRANULAR MATERIAL

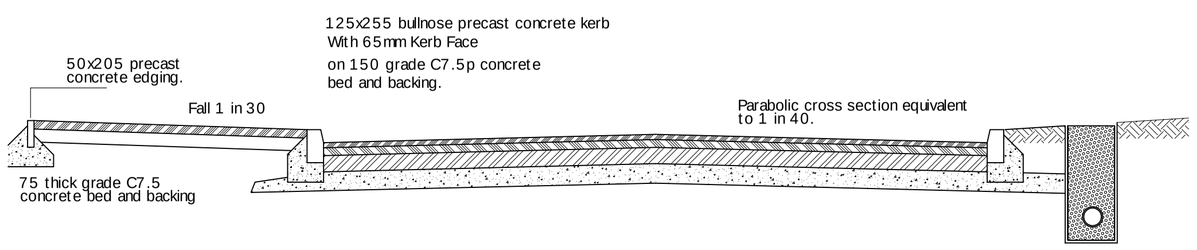

TYPICAL CARRIAGEWAY CROSS SECTION

N.B. Sketch diagrammatic only, not to scale.

NOTES

1. ALL DIMENSIONS ARE IN MILLIMETRES.
2. DO NOT SCALE FROM THIS DRAWING.
3. THIS DRAWING IS TO BE READ IN CONJUNCTION WITH ALL OTHER RELATED DRAWINGS AND DOCUMENTS. THE USER SHOULD CONSULT THE DRAWING ISSUE REGISTER FOR DETAILS.
4. THE CONTRACTOR IS TO CHECK AND VERIFY ALL DIMENSIONS ON SITE PRIOR TO TO COMMENCEMENT OF CONSTRUCTION WORKS.
5. THE ENGINEER/ARCHITECT SHOULD BE CONTACTED IMMEDIATELEY IF THE ASSUMPTIONS USED IN THE DESIGN AND DRAWING PREPARARTION DIFFER TO THAT FOUND ON SITE.

Rev.	Amendments	Date	By

Keystone Design Associates Ltd.

Registered Office
Development House
261 Church Street
Blackpool
FY1 3PB

Tel. No. 01253 649040
Fax. No. 01253 752901
Email : info@keystonedesign.co.uk

PROJECT ADDRESS
LOFT SHAY FARM
CLITHEROE ROAD LOWER GREEN

PROJECT TITLE
NEW DWELLINGS

DRAWING TITLE
SITE DIMENSIONS & ROAD SECTION

Client		Scales
MR & MRS STEPHENSON		1:50/250@A1
Drawn: PB	Checked	Date: 08/08/18
DRAWING No. A018/140/P/05		Revision --

This drawing & contents are the property of Keystone Design Assoc Ltd
Unauthorised reproduction of the whole or any part there of infringes
Copyright and may lead to prosecution of civil proceedings

H:/Server/Drawings/2018/loft shay farm clitheroe rd lower green

This document was created with Win2PDF available at http://www.win2pdf.com.
The unregistered version of Win2PDF is for evaluation or non-commercial use only.