Arboricultural Impact Assessment

in Relation to Proposed 39 Unit Residential Development, Renovation of Farmhouse, and Conversion of Farm Buildings for Residential Usage at

Land at Crow Trees Farm, Crow Trees Brow, Chatburn, Lancashire, BB7 4AA

Prepared by:

Bowland Tree Consultancy Ltd

September 2022

CONTROL SHEET

Project No.:	BTC2448
Site:	Land at Crow Trees Farm, Crow Trees, Chatburn, BB7 4AA
Agent:	Maybern Planning and Developing
Council:	Ribble Valley Borough Council
Survey Date(s):	23 March 2022
Surveyed by:	Phill Harris MSc BSc(Hons) HND MArborA CEnv MICFor
Prepared by:	Phill Harris MSc BSc(Hons) HND MArborA CEnv MICFor & Joseph Lambert BSc (Hons) FdSc MArborA
Checked by:	Phill Harris MSc BSc(Hons) HND MArborA CEnv MICFor
Date of Issue:	15 September 2022
Status:	First Issue for Planning
Version No:	1

Unit Two
11 Cannon Street
Preston
Lancashire
PR1 3NR

T: 01772 437150

Ground Floor
14 Castlegate
Penrith
Cumbria
CA11 7HZ

T: 01768 744450

E: info@bowlandtreeconsultancy.co.uk

DISCLAIMER

Survey Limitations: Unless otherwise stated all trees are surveyed from ground level using non-invasive techniques. The disclosure of hidden crown and stem defects, in particular where they may be above a reachable height or where trees are ivy clad or in areas of ground vegetation, cannot therefore be expected. All obvious defects, however, are reported. Detailed tree safety appraisals are only carried out under specific written instructions. Comments upon evident tree safety relate to the condition of said tree at the time of the survey only.
Unless otherwise stated all trees should be re-inspected annually in order to appraise their on-going mechanical integrity and physiological condition. It should, however, be recognised that tree condition is subject to change, for example due to the effects of disease, decay, high winds, development works, etc. Changes in land use or site conditions (e.g. development that increases access frequency) and the occurrence of severe weather incidents are also significant considerations with regards tree structural integrity and trees should therefore be re-assessed in the context of such changes and/or incidents and inspected at intervals relative to identified and varying site conditions and associated risks.
Where trees are located wholly or partially on neighbouring private third-party land then said land is not accessed and our inspection is therefore restricted to what can reasonably be seen from within the site. Stem diameters of trees located on such land are estimated. Any subsequent comments and judgments made in respect of such trees are based on these restrictions and are our preliminary opinion only. Recommendations for works to neighbouring third-party trees are only made where a potentially unacceptable risk to persons and/or property has been identified during our survey. Where significant structural defects of third-party trees are identified and associated management works are considered essential to negate any risk of harm and/or damage then we will first attempt to inform the site occupier of the issues and, if not possible, then inform the relevant Council. Where a more detailed assessment is considered necessary then appropriate recommendations are set out in the Tree Survey Schedule.
Where tree stem locations are not included on the plan(s) provided then they are plotted at the time of the survey using, where appropriate and/or practicable, a combination of measurement triangulation and GPS co-ordination. Where this is not possible then locations are estimated. Restrictions in these respects are detailed in the report.
The tree survey and any report information provided is intended as a guide to identify key tree related constraints to site development only. As such, the potential influence of trees upon existing or proposed buildings or other structures resulting from the effects of their roots abstracting water from shrinkable load-bearing soils is not considered herein. The tree survey information in its current form should not therefore be considered sufficient to determine appropriate foundation depths for new buildings. Accordingly, an updated survey, with reference to the current NHBC Standards Chapter 4.2 - Building Near Trees, must therefore be prepared for the specific purpose of informing suitable foundation depths subsequent to planning approval being granted. The advice of a structural engineer must also be sought with regard to appropriate foundation depths for new buildings.

Third Parties: Any disclosure of this document to a third party is subject to this disclaimer. The report was prepared by Bowland Tree Consultancy Ltd at the instruction of and for use by our client. This report does not in any way constitute advice to any third party who is able to access it by any means. Bowland Tree Consultancy Ltd excludes to the fullest extent lawfully permitted all liability whatsoever for any loss or damage arising from reliance on the contents of this report.

Statutory Tree Protection: It is the client's responsibility to check for the presence of any statutory tree protection measures, such as the site's location within a Conservation Area and/or the presence of any Tree Preservation Orders, directly with the applicable Council's planning department prior to scheduling or carrying out any tree works. In turn, it is also the client's responsibility to check for the need for a felling licence with the Forestry Commission prior to scheduling or carrying out any tree works. Bowland Tree Consultancy Ltd cannot be held responsible for any decisions made by the client to prune or remove trees where any such statutory protection exists.

Liability: This report was prepared for the sole use of 'The Client' and, where applicable, the client's 'Agent', in accordance with the agreement under which the services were instructed. No warranty, express or implied, is made as to the advice in this report or any other service provided by Bowland Tree Consultancy Ltd. This report may not be relied upon by any other party except the client or any third party for whom the report is intended without the prior written permission of Bowland Tree Consultancy Ltd. The content of this report is, at least in part, based upon information provided by secondary data sources and on the assumption that all relevant information has been provided by those parties from whom it has been requested. Information obtained from any third party has not been independently verified by Bowland Tree Consultancy Ltd, unless otherwise stated in the report.

Validity: The findings and recommendations contained within this report are, providing its recommendations are observed and the site conditions are retained as per the date(s) of the survey, valid for a period of twelve months from the last survey date. This period of validity may be reduced should there be any changes in factors affecting both the surrounding environment and/or built structures in relative proximity to the trees. The condition of trees should be re-appraised directly, through a site survey, following major weather events such as storms, changes undertaken to the site's conditions, inclusive of demolition and/or ground works, or the removal of existing site vegetation, including trees.

CONTENTS **Page**

APPENDICES:

PLANS:

1.0 INTRODUCTION

Terms of Reference

1.1 Bowland Tree Consultancy Ltd was instructed to:

a) Survey, as individuals or by group, all trees having reasonable potential to affect or to be adversely affected by the proposed development of the site under consideration;
b) Annotate the existing and proposed site plans to produce a Tree Constraints Plan and a Tree Impact Plan, identifying tree retention categories, crown spreads, Root Protection Areas, projected tree related impacts, trees proposed for retention, etc.;
c) Prepare a tabulated Tree Survey Schedule based on guidance specified BS5837:2012 - Trees in Relation to Design, Demolition and Construction – Recommendations;
d) Evaluate the potential tree related impacts and design conflicts of the proposals, based on the supplied development proposal plan(s);
e) Advise on removal, retention and management options for the trees in the current context and in the context of the proposed development;
f) Advise on suitable retained tree protection measures required during development; and
g) Produce an Arboricultural Impact Assessment report outlining the main tree related issues and reasonably foreseeable tree impacts in relation to the proposals and commenting on suitable compensation and mitigation provisions and retained tree protection measures.

Scope and Purpose of Report

1.2 By detailing foreseeable tree related issues this report is intended to assist the Local Planning Authority (LPA), in this case Ribble Valley Borough Council (Ribble Valley BC) in their review of the proposed development and, as such, should be supplied to them in support of the planning application to which it pertains. Essentially, it provides an initial analysis of the impacts that the proposed development is projected to have on trees located within the site and, where practicable, on land immediately adjacent to its boundaries. It also offers guidance on suitable retained tree management and compensation for projected losses, along with advice on appropriate tree protection measures in accordance with current guidance in the context of the proposals.

Site Visit, Data Collection and Tree Plans

1.3 Further to the instruction it is confirmed that a tree survey was carried out on 23 March 2022, in accordance with the preceding disclaimer, and all tree data collected on site is set out in the attached tabulated Tree Survey Schedule (TSS) at Appendix One which, for ease of interpretation, should be read alongside the appended BS5837:2012 Table 1.

1.4 The survey identified 57 individual trees (prefixed ‘T’), four groups of trees (prefixed ‘G’) and three hedges (prefixed ‘H’) which have been numbered accordingly on the Tree Constraints Plan (TCP) and Tree Impact Plan (TIP) appended. The plans, which together detail the existing and readily definable tree constraints along with an overlay of the development proposals and the projected impacts, are based on the existing topographical survey plan and the proposed site plan, which were provided in electronic format by the client. In turn, for the purpose of this report, it is presumed that the provided plans’ details are accurate and up to date.

1.5 In this respect the TCP details the existing site with the readily definable tree constraints, whilst the purpose of the TIP is to give an initial indication of the impacts that the proposed development is projected to have on trees. This should subsequently be used by the LPA’s tree specialist to preliminarily assess if the proposed development can potentially be constructed in accordance with BS5837:2012 and, along with the information provided in this report, as a basis for the LPA to request further details regarding specific matters relating to trees at suitable stages in the planning process.

2.0 STATUTORY PROTECTION IN RESPECT OF TREES AND ASSOCIATED WILDLIFE

Tree Preservation Orders and Conservation Area Designations

2.1 The Town and Country Planning Act (1990) (the Act) and associated Regulations empower Local Planning Authorities (LPAs) to protect trees in the interests of amenity by making Tree Preservation Orders (TPOs). The Act also affords protection for trees of over 75 mm diameter that stand within the curtilage of a Conservation Area (CA). Subject to certain exemptions, an application must be made to the LPA in question to carry out works upon or to remove trees that are subject to a TPO, whilst six weeks' notice of intention must be given to carry out works upon or to remove trees within a CA that are not protected by a TPO.

2.2 According to Ribble Valley BC's planning department maps (accessed on line 17/05/2022) the majority of the site stands within the Chatburn CA, with only the field to its south-west being outside the CA's boundaries. The council's website, however, does not give details of TPOs and, as such, it is therefore essential that the LPA be contacted directly to check for any statutory protection prior to scheduling or carrying out any tree works that are not directly related to the implementation of a detailed (i.e. full) planning permission.

2.3 According to Ribble Valley BC's planning department maps (accessed on line 17/05/2022) the northern section of the site encompassing the farmhouse/buildings and immediate surroundings are within the Chatburn CA, whilst the field to the south-west is outside the CA's boundaries. In turn, trees along the site frontage of the adjacent dwelling of Crow Trees Barn, and to the east of the site, are shown on the Council's CA Appraisal Map as 'important trees'.

2.4 The council's website, however, does not give details of TPOs and, as such, it is therefore essential that the LPA be contacted directly to check for any statutory protection prior to scheduling or carrying out any tree works that are not directly related to the implementation of a detailed (i.e. full) planning permission.

Protected Species

2.5 Nesting birds are afforded statutory protection under the Wildlife & Countryside Act (1981) (as amended) and their potential presence should therefore be considered when clipping hedges, removing climbing plants and pruning and removing trees. The breeding period for woodlands runs from March to August inclusive. Hedges provide valuable nesting sites for many birds and clipping should therefore be avoided during March to July. Trees, hedges and ivy should be inspected for nests prior to pruning or removal and any work likely to destroy or disturb active nests should be avoided until the young have fledged.

2.6 All bat species and their roosts are protected under Schedule 5 of the Wildlife & Countryside Act (1981) (as amended) and under Schedule 2 of the Conservation of Habitats & Species Regulations 2017 (as amended). In this respect it should be noted that it is possible that unidentified bat habitat features may be located high up in tree crowns and all personnel carrying out tree works at the site should therefore be vigilant and mindful of the possibility that roosting bats may be present in trees with such features. If any bat roosts are subsequently identified then it is essential that works are halted immediately and that a suitably qualified and experienced ecologist investigates and advises on appropriate actions prior to works continuing.

2.7 In turn, any subsequent works carried out in relation to any protected species must be carried out under guidance from a suitably qualified and experienced ecologist and in strict accordance with the guidance provided in BS42020:2013 - Biodiversity – Code of Practice for Planning and Development and, with regard to bats, in strict accordance with BS8596:2015 - Surveying for Bats in Trees and Woodlands.

Felling Licences

2.8 Subject to certain exemptions the Forestry Act (1967) requires that a 'Felling Licence' be obtained to remove growing trees amounting to more than five cubic metres of timber in a calendar quarter. Felling Licences are administered by the Forestry Commission and contravention of the associated controls can incur substantial penalties. A felling licence is, however, not required for the felling of trees immediately required for the purpose of carrying out development authorised by a full planning permission granted under the Town and Country Planning Act 1990.

3.0 THE SITE AND THE SURROUNDINGS

3.1 The site under consideration is located on the western edge of the village of Chatburn, and currently comprises of a two-storey stone-built and rendered detached farmhouse with associated gardens and outhouses to the north-east, a former dairy building and other barns. and agricultural pasture fields with trees and hedges to the south and west (see appended TCP). It is bordered to the north by Crow Trees Brow and a residential property, to the east by a residential property and its gardens, to the south by a railway line and to the west by an access road to a neighbouring property to the south.

3.2 As indicated on the appended TCP the topographical survey plan provided shows that the site occupies a minor north-west facing gradient, with ground levels varying by up to approximately 2 metres from the lowest point to the east to the highest point to the west.

4.0 THE TREE POPULATION

4.1 As noted previously, a total of 57 individual trees, four groups of trees and three hedges were surveyed for the purpose of this appraisal. They range from young to post-mature in age, with heights up to approximately 21 metres, maximum diametral crown spreads up to approximately 18 metres, and stem diameters up to approximately 1200 millimetres. Detailed tree dimensions and other pertinent information, such as structural defects and physiological deficiencies, are included in the Tree Survey Schedule (TSS) at Appendix One.

4.2 In respect of the survey it should be noted that tree quality is categorised within the existing context without taking any development proposals into account. However, recommendations for works included in the TSS take both current site usage and the proposed development into consideration where there are definable issues with regard to specific trees.

4.3 Under the UK's planning system trees are a material consideration in the planning and development process. Nonetheless, only trees of a suitable quality and value should be considered a material constraint to development. In this respect the TSS includes a column ('Cat. Grade') listing the trees' respective retention values, where they are rated either 'A', 'B', 'C' or 'U', as per BS5837:2012 Table 1 (Appendix One). 'A' category trees are those considered to be of 'high quality' and, accordingly, the most suitable for retention, whilst 'B' category trees are those considered to be of 'moderate quality', and 'C' category trees are those considered to be of 'low quality' with a correlated low retention value. In turn, 'U' category trees are those that are considered to be 'unsuitable for retention'.

4.4 As detailed in Table A (over page), seven trees were categorised as high quality (i.e. 'A' category), nine trees were categorised as moderate quality (i.e. 'B' category), 34 trees, one group and three hedges were categorised as low quality (i.e. 'C' category), and seven trees and three groups were classed as unsuitable for long term retention (i.e. 'U' category) regardless of the development proposals.

Table A: BS5837-2012 Retention Categories of the Surveyed Trees, Groups and Hedges

	Ret. Cats.	Tree/Group/Hedge Numbers	Totals
Those of a moderate or high quality that should be afforded appropriate consideration in the context of development	**'A'**	T2*, T40*, T41*, T46, T49, T50, T56*	*7 Trees*
	'B'	T1, T6*, T19, T22, T34*, T37*, T42*, T43, T55*	*9 Trees*
Those of a low quality that should not be considered a material constraint to development	**'C'**	T4*, T5, T10, T11, T12, T13, T14, T15, T16, T17, T20, T21, T23, T24, T25, T26, T27, T28, T29*, T30*, T31, T32*, T33, T35, T36, T38*, T39, T44, T45, T47, T48, T51*, T52*, T57, G4, H1, H2, H3	*34 Trees* *1 Group* *3 Hedges*
Those that should be removed for pertinent management reasons regardless of site proposals	**'U'**	T3, T7, T8, T9, T18, T53*, T54*, G1, G2*, G3*	*7 Trees* *3 Groups*
			= 57 Trees, 4 Groups & 3 Hedges in Total

*Note: Trees/groups denoted with an asterisk are located on, or potentially partly located on, neighbouring third-party owned land

5.0 THE DEVELOPMENT PROPOSAL AND ITS PROJECTED ARBORICULTURAL IMPACTS

The Development Proposal

5.1 As indicated on the proposed site plan, as prepared by LMP Architects, and the appended TIP, the proposal is for the renovation of the existing farmhouse and the conversion and extension of a former dairy and adjacent barn, and for a 39 unit residential development comprising a mix of semi-detached and terraced houses and bungalows with private gardens, car parking provision, driveways, and access roadways, along with areas of open space including a larger 'biodiversity area' to the centre-north.

5.2 As also detailed on the TIP it is proposed that there are to be two vehicular and pedestrian accesses off Chatburn Brow, with access to the farmhouse and barn conversion to be via the existing point to the north, and access to the wider 39 unit development site to be via a second existing point to the north-west, which is to be widened.

Projected Arboricultural Losses Relating to the Proposal

Table B: Projected Arboricultural Impacts of Proposed Development & Other Tree Removal Proposals

	Ret. Cats.	Removals necessary to implement development	Removals proposed in context of development	Removals recommended regardless of development	Total no. of removals
Those of a high quality that should be afforded appropriate consideration in the context of development	**'A'**	-	-	-	-
Those of a moderate quality that should be afforded appropriate consideration in the context of development	**'B'**	-	-	-	-
Those of a low quality that should be afforded appropriate consideration in the context of development	**'C'**	T10, T11, T12, T48, T57, G4, H1 (part), H2 (part), H3 (part)	T17, T20, T31, T47	T5	*10 Trees* *1 Group* *3 part Hedges*
Those that should be removed for sound management reasons regardless of plans	**'U'**	-	-	T3, T7, T8, T9, T18, G1	*5 Trees* *1 Group*
Totals		*5 Trees* *1 Group* *3 part Hedges*	*4 Trees*	*6 Trees* *1 Group*	***= 15 Trees, 2 Groups & 3 part Hedges in Total***

5.3 In turn, as detailed in Table B, above, it is projected that construction of the development as proposed will require the removal of nine low quality (i.e. category 'C') trees, one low quality group and parts of three low quality hedges. Additionally, as also detailed in Table B, one low

quality (i.e. category 'C') tree is proposed for removal due to projected displacement of a stone boundary wall and five 'U' category trees located within the site are recommended for removal regardless of the development proposals. In this respect it is emphasised that the development was designed to retain all trees of high quality (i.e. 'A' category) and moderate quality (i.e. 'B' category).

Compensation for Projected Arboricultural Losses as Part of the Scheme's Landscaping

5.4 It is evident from the plans provided that the proposed development can accommodate sufficient new tree and hedge planting, both in various private property gardens and in the open spaces/'biodiversity area'. In this respect, indicative locations considered suitable for new tree and hedge planting with appropriate species are subsequently included on the appended TIP.

5.5 As such, it is projected that sufficiently adequate compensation, as a component of a detailed landscaping scheme, can be achieved for the necessary low quality tree losses required to construct the development as proposed. In turn, the provision of new tree and hedge planting as a component of a detailed landscaping scheme, in agreement with the LPA, can be assured through the imposition of a suitably worded condition attached to a planning approval.

Special Design, Materials and Working Methods for Construction within RPAs

5.6 The appraisal identified that there are various site development works proposed in close proximity to and within the RPAs and canopies of various retained trees, groups, and hedges, as detailed on the TIP and at Table C, below. Nonetheless, it should be noted that such works are achievable under current industry guidance (i.e. BS5837:2012) providing that they are planned and implemented whilst affording a suitable level of protection to the tree in question, such as through the use of appropriate working methods and procedures.

5.7 As such, it will subsequently be necessary to ensure that the trees under consideration are suitably protected in strict accordance with current government guidance through the use of special working and protection measures, specific details of which are given in Table C.

Table C: Elements of Proposal with Potential to Impact Upon Trees and Subsequent Specialist Working Methods

Element of Proposal with Potential to Impact Upon Retained Trees	Applicable Trees	Proposed Specialist Working and Construction Methods	Relevant BS5837 Section(s) to be Adhered to	Information Required and Relevant Specialist
Resurfacing and widening of existing access roadway to west of site	T55, T56	▪ Proposed western access road to mostly follow existing hard-surfaced access road ▪ Existing hard surfaced entrance east of T56 to be removed down to sub-base level only with new wearing course installed on top minimising risk of damage to any roots below. ▪ Excavations to widen driveway to required width to be undertaken on east side of existing hard surface only. ▪ No access of vehicles, plant or machinery or storage of site materials on west side of existing track. ▪ Any excavations for kerbstone edging along west side of existing access to be undertaken by hand and any concrete lined with visqueen or similar impervious membrane, joined to prevent leaching.	7.4	Applicable engineer to provide details of existing and proposed levels of roads within RPAs Main contractor to provide method statement of works, inclusive of tree protection measures
Installation of boundary fencing within RPAs and crowns	T1, T2, T4, T6, T37, T38-T44, T46, T50, T51-T55 G3, H1	▪ Hand dig post holes, line post holes with visqueen or similar impervious membrane, joined to prevent leaching of concrete prior to concreting posts into place	7.4.4.5	Work to comply with Arboricultural Method Statement to be provided by Arboricultural Consultant

5.8 In addition to the above, all site operations involving plant with booms, jibs and counterweights to be planned in advance to prevent contact with retained trees, and works adjacent to trees conducted under supervision of a banksman to ensure that adequate clearances from retained trees are maintained.

5.9 Consequently, in order to ensure adequate protection of retained trees then any special working methods and or protection measures for the proposed development can be included in a suitably detailed site and development specific Arboricultural Method Statement and Tree Protection Plan, the provision of which and adherence to can be conditioned to a planning approval (see paragraphs 6.6 and 6.7 for further details regarding Arboricultural Method Statements and Tree Protection Plans).

6.0 RECOMMENDATIONS FOR SUCCESSFUL TREE RETENTION IN THE CONTEXT OF DEVELOPMENT

Root Protection Areas and Construction Exclusion Zones

6.1 Adequate protection of the Root Protection Areas (RPAs) of retained trees during construction is essential if their long-term viability is to be assured. RPAs, which are calculated through a method provided in BS5837:2012, are ground areas that should be protected by temporary protective fencing as Construction Exclusion Zones (CEZs) throughout the development process, thereby keeping the trees' root zones free from disturbance. Consequently, the RPA distances, as detailed in the TSS (see 6.2) and on the TCP and the TIP, give an idea of the on-site below-ground constraints in respect of tree roots and assist in planning for appropriate tree retention in relation to feasible development.

6.2 The TSS includes two columns listing the RPAs of the individually surveyed trees and, where applicable, the largest of the trees in any surveyed groups as overall areas in square metres and as radial distances. The radial RPAs are indicated as magenta coloured circles on the TCP and TIP.

6.3 With regard to CEZs the design, materials and construction of the fencing should be appropriate for the intensity and type of site construction works, should conform to at least section 6.2 of BS5837:2012, and should be secured by the imposition of a suitably worded planning condition. A default Temporary Protective Fencing Specification is included at Appendix Two.

Underground Utilities and Drainage

6.4 The installation of underground utilities in close proximity to trees can cause serious damage to their roots. As such, it is essential that utilities be routed outside RPAs unless there is no other available option. Where RPAs cannot be avoided then guidelines set out in the National Joint Utilities Group publication 'Volume 4: NJUG Guidelines for the Planning, Installation and Maintenance of Utility Apparatus in Proximity to Trees (Issue 2) – Operatives Handbook' should be followed (e.g. trenches of a very limited width to be hand dug or the use of directional drilling).

6.5 To date, no service plan showing proposed service and/or drainage runs has been provided in respect of the development under consideration. Nonetheless, the proposed site plan provided indicates that, if correctly planned, there should be sufficient space to run the services and drainage outside the RPAs of the trees adjacent to the site. In turn, in order to ensure that this advice is adhered to, the provision of a service plan, with all service runs and drainage routed outside retained tree RPAs, can be conditioned to a planning approval.

Arboricultural Method Statement and Tree Protection Plan

6.6 Government guidance recommends that, where considered expedient by the LPA, an Arboricultural Method Statement (AMS) and a Tree Protection Plan (TPP) be prepared detailing special mitigation construction issues in relation to the development under consideration. Essentially, the AMS and TPP describe and detail the procedures, working methods and protective measures to be used in relation to retained trees in order to ensure that they are adequately protected during the construction process.

6.7 In order to ensure that any such special working methods are followed, and that the retained trees are adequately protected throughout the development process, the production of and adherence to an AMS and a TPP can be conditioned to a planning approval if deemed necessary.

7.0 OTHER RECOMMENDATIONS

Non-Development Related Tree Works and Recommendations

7.1 Any tree pruning works that are non-development related (see TSS) are recommended in accordance with prudent arboricultural management and should therefore be carried out regardless of any site development proposals and potential land use changes. All tree works should be undertaken in strict accordance with BS3998:2010 - Tree Work - Recommendations.

Tree Work Related Consents

7.2 No tree pruning or removal works should commence on site until necessary consents have been obtained from the LPA as part of a planning approval or in respect of any statutory tree protection (e.g. CA and/or TPO protection).

Arboricultural Contractors

7.3 All tree works should be carried out by suitably qualified and experienced arboricultural contractors carrying appropriate public liability insurance cover and be implemented to the minimum current CE and UK industry standards and in accordance with industry codes of practice. Only certificated personnel should, in accordance with The Control of Pesticides Regulations, apply any pesticides.

Contractors and Subsequently Identified Tree Defects

7.4 Tree contractors should be made aware that, should any significant tree defects become apparent during operations that would not have been immediately obvious to the surveyor, then these should be notified immediately to the client and consultant within five working days.

New Tree Planting

7.5 All tree planting should be carried out in accordance with BS8545:2014 Trees: from nursery to independence in the landscape – Recommendations, and in accordance with the guidance detailed in section 5.6 and Table A.1 of BS5837:2012. In turn, a requirement for these works to conform with the current guidance can be conditioned to a planning approval.

Landscaping Within and Close to Retained Trees' RPAs

7.6 Any landscaping carried out within retained trees' RPAs should be undertaken in strict accordance with the guidance detailed in section 8 of BS5837:2012. In turn, a requirement for these works to conform with the current guidance can be conditioned to a planning approval.

Retained Tree Management

7.7 Trees are dynamic living organisms, and even those evidently in good condition can succumb to damage and/or stress. Accordingly, any tree risk management appraisals and subsequent recommendations made herein were based on observations and site circumstances at the time of the survey.

7.8 In this respect it should be noted that, under the Occupiers' Liability Act (1957 & 1984), site occupants have a duty of care to take reasonable steps to minimise the risk of personal injury and/or damage to property from any tree located within the land they occupy. Consequently, it is accepted that these steps should include commissioning an arboriculturist to survey their trees in order to identify any risk of harm to persons or damage to property that they may present and, where unacceptable risks are identified, taking suitable remedial action to negate those risks.

8.0 SUMMARY AND CONCLUSIONS

8.1 Fifty-seven individual trees, four groups of trees and three hedges were surveyed in respect of a proposed 39 unit residential development, the renovation of the existing farmhouse, and the conversion of a former dairy for residential usage at the site under consideration.

8.2 Seven trees were categorised as high quality, nine trees were categorised as moderate quality, 34 trees, one group and three hedges were categorised as low quality, and seven trees and three groups were classed as unsuitable for long term retention regardless of the development proposals.

8.3 An appraisal of the proposal documentation provided to date identified that, discounting the five trees located within the site that are considered unsuitable for long term retention regardless, construction of the development as proposed will require the removal of nine low quality trees, one low quality group and parts of three low quality hedges, whilst a tenth low quality tree is also recommended for removal as it is projected to cause structural displacement to a wall.

8.4 Nonetheless, it is noted that the proposed layout evidently has sufficient space that is considered suitable for new tree and hedge planting with suitable species, as demonstrated through the indicative proposed planting locations shown on the associated Tree Impact Plan.

8.5 As such, it is projected that adequate compensatory tree and hedge planting, as a component of a detailed landscaping scheme, can be achieved for the necessary low quality tree losses.

8.6 In turn, the provision of new tree and hedge planting can be assured through the imposition of a suitably worded condition attached to a planning approval requiring the provision of and adherence to a detailed landscaping scheme.

8.7 Consequently, any new tree planting or other landscaping works subsequently carried out within and close to retained trees' RPAs, should be carried out in strict accordance with current government guidance.

8.8 In addition to the above it is also concluded that, in order to ensure successful existing tree preservation over the long-term, it is essential that any retained trees are protected in strict

accordance with current Government guidance and the recommendations included herein.

8.9 In this respect the appraisal identified that the proposed widening of the access roadway and the installation of boundary fences have the potential to impact upon the RPAs and canopy spreads of various retained trees. As such, various special construction, working and protection methods and measures are proposed in order to minimise any potential damage to the retained trees in question.

8.10 Accordingly, in order to ensure adequate protection of retained trees, then the aforementioned special consideration factors can be included in a suitably detailed Arboricultural Method Statement and Tree Protection Plan, the provision of which and adherence to can be conditioned to a planning permission.

8.11 In turn, it is essential that all site works be carried out in strict accordance with any advice and recommendations made by the project ecologist where applicable and, in turn, in accordance with current government guidance relating to biodiversity, wildlife and development. Consequently, it may therefore be necessary for the project arboriculturist and ecologist to converse on these matters as part of the planning process.

8.12 In conclusion, provided all the recommendations in this report are followed it is considered that the proposed development can be implemented in accordance with British Standard BS 5837:2012, with a resultant negligible impact on retained trees.

REFERENCES

BS42020:2013 - Biodiversity – Code of Practice for Planning and Development. BSI British Standards, London.
BS8596:2015 - Surveying for Bats in Trees and Woodlands. BSI British Standards, London.
BS8545:2014 - Trees: From Nursery to Independence in the Landscape – Recommendations. BSI British Standards, London.
BS3998:2010 - Tree Work - Recommendations. BSI British Standards, London.
BS5837:2012 - Trees in Relation to Design, Demolition and Construction – Recommendations. BSI British Standards, London.
National House Building Council (2017). NHBC Standards Chapter 4.2 - Building Near Trees. NHBC, Amersham.
National Joint Utilities Group (2007). Volume 4: NJUG Guidelines For The Planning, Installation And Maintenance Of Utility Apparatus In Proximity To Trees (Issue 2) – Operatives Handbook.

TREE SURVEY SCHEDULE FOR ARBORICULTURAL IMPACT ASSESSMENT				
Site:	Crow Trees Farm, Crow Trees Brow, Chatburn, Lancashire, BB7 4AA	**Surveyor:**	Phill Harris Chartered Arboriculturist	**Page:** 2 of 10
Agent:	Maybern Planning & Development	**Survey Date:**	23 March 2022	
		Job Reference:	BTC2448	

No.	Species	Height	Stem Diam.	Branch Spread		Branch & Canopy Clearances	Life Stage	PC	General Observations and Comments	Management Recommendations	ERC	Cat. Grade	RPA (m²)	RPA Radius (m)
T5	Common Hawthorn	9.5	1x360 1x200 (ts)	N E S W	3.5 4 3.5 1.5	N/A 1	EM	G	▪ Stem base almost in contact with stone boundary wall at point where evidently previously rebuilt. ▪ Stem bifurcates at a height of approximately 0.3m. ▪ Highly biased crown east due to partial suppression by neighbouring trees.	▪ Remove tree to prevent further displacement causation to stone boundary wall.	10+	C1	77	4.94
T6	Silver Birch	16.5	300#	N E S W	3 3 3 3	5 4	SM	G	▪ Located on neighbouring land and subsequently not inspected in detail. NB: Proposed hard surfacing for path adjacent to property encroach <4% of indicated RPA. As such, provided remaining RPA is afforded adequate protection, this is not projected to significantly impact long term structural and/or physiological condition.	▪ Ensure protection of tree's RPA, canopy and stem, throughout construction through establishment of CEZ in accordance with appended temporary fencing specification.	40+	B1	41	3.6
T7	Silver Birch	9.5	190	N E S W	0 4 3 1	N/A 4	Y	P	▪ Moderately severe stem lean and highly biased crown south-east. ▪ Crown showing signs of a substantial reduction in vitality. ▪ Short projected remaining life expectancy.	▪ Remove tree due to short projected remaining life expectancy.	<10	U	16	2.28
T8	Sycamore	8	140	N E S W	0 2 2 2	N/A 1	Y	M	▪ Extensive partially occluded squirrel damage throughout length of stem. ▪ Highly biased crown south due to partial suppression by neighbouring trees. ▪ Short projected remaining life expectancy.	▪ Remove tree due to short projected remaining life expectancy.	<10	U	9	1.68
T9	Cherry	5.5	290	N E S W	2 4 4 0	N/A 2	EM	MD	▪ Stem trifurcates at a height of approximately 1m, with western secondary stem decayed and failed. ▪ Highly biased crown south-east. ▪ Crown showing signs of a severe and evidently progressive decline. ▪ Short projected remaining life expectancy.	▪ Remove tree due to short projected remaining life expectancy.	<10	U	38	3.48
T10	Silver Birch	12.5	240	N E S W	3 1 2.5 3	6 3	SM	M	▪ Moderately biased crown west due to partial suppression by neighbouring trees.	▪ Remove tree in order to construct development as proposed.	40+	C1	26	2.88
T11	Goat Willow	14	710	N E S W	7.5 7.5 7.5 7.5	2 2.5	PM	G	▪ Stem divides into multiple primary branches with tight forks and some included bark at a height of approximately 2.5m.	▪ Remove tree in order to construct development as proposed.	10+	C1	228	8.52
T12	Silver Birch	16.5	450	N E S W	3 6 6 3	3.5-S 2	EM	G	▪ Minor stem lean and highly biased crown south-east due to partial suppression by neighbouring tree.	▪ Remove tree in order to construct development as proposed.	40+	C1	92	5.4

TREE SURVEY SCHEDULE FOR ARBORICULTURAL IMPACT ASSESSMENT				
Site:	Crow Trees Farm, Crow Trees Brow, Chatburn, Lancashire, BB7 4AA	**Surveyor:**	Phill Harris Chartered Arboriculturist	**Page:** 3 of 10
Agent:	Maybern Planning & Development	**Survey Date:**	23 March 2022	
		Job Reference:	BTC2448	

No.	Species	Height	Stem Diam.	Branch Spread		Branch & Canopy Clearances	Life Stage	PC	General Observations and Comments	Management Recommendations	ERC	Cat. Grade	RPA (m²)	RPA Radius (m)
T13	Maidenhair Tree	6	100	N E S W	1 1 1 1	2 2	Y	G	▪ No structural defects or physiological issues noted at time of survey.	▪ Retain tree in context of proposed development. ▪ Ensure protection of tree's RPA, canopy and stem, throughout construction through establishment of CEZ in accordance with appended temporary fencing specification.	40+	C1	5	1.2
T14	Crab Apple	5.5	120	N E S W	2 2 2 2	2 1	Y	G	▪ No structural defects or physiological issues noted at time of survey.	▪ Retain tree in context of proposed development. ▪ Ensure protection of tree's RPA, canopy and stem, throughout construction through establishment of CEZ in accordance with appended temporary fencing specification.	40+	C1	7	1.44
T15	Crab Apple	8	260	N E S W	3.5 3.5 4.5 3.5	1-W 2	EM	M	▪ Crown showing signs of a reduction in vitality.	▪ Retain tree in context of proposed development. ▪ Ensure protection of tree's RPA, canopy and stem, throughout construction through establishment of CEZ in accordance with appended temporary fencing specification.	10+	C1	31	3.12
T16	Crab Apple	7.5	180	N E S W	1.5 3.5 3.5 1.5	0.5 1	SM	G	▪ Slightly biased crown south-east.	▪ Retain tree in context of proposed development. ▪ Ensure protection of tree's RPA, canopy and stem, throughout construction through establishment of CEZ in accordance with appended temporary fencing specification.	20+	C1	15	2.16
T17	Walnut	8	1x220 1x200 (ts)	N E S W	5 5 5 4.5	1-N 1	SM	G	▪ Moderately severe stem lean south-east. ▪ Stem bifurcates at a height of approximately 1m with a tight compression fork with included bark.	▪ Remove tree in context of proposed development works.	10+	C1	40	3.57
T18	Cherry	7	4x80 (ms)	N E S W	2.5 2.5 2.5 0.5	N/A 2	SM	M	▪ Multi-stemmed from a height of approximately 1m with tight forks. ▪ Multiple decay pockets to stems. ▪ Highly biased crown east due to partial suppression by neighbouring tree.	▪ Remove tree due to short projected remaining life expectancy.	<10	U	12	1.92
T19	Norway Maple	10	420	N E S W	4 4 4 4	2 3	SM	M	▪ Light ivy up stem. ▪ Stem bifurcates at a height of approximately 3m. ▪ Crown showing signs of a reduction in vitality, with moderate amount of deadwood up to approximately 30mm diameter.	▪ Retain tree in context of proposed development. ▪ Ensure protection of tree's RPA, canopy and stem, throughout construction through establishment of CEZ in accordance with appended temporary fencing specification.	20+	B1	80	5.04

TREE SURVEY SCHEDULE FOR ARBORICULTURAL IMPACT ASSESSMENT				
Site:	Crow Trees Farm, Crow Trees Brow, Chatburn, Lancashire, BB7 4AA	**Surveyor:**	Phill Harris Chartered Arboriculturist	**Page:** 4 of 10
Agent:	Maybern Planning & Development	**Survey Date:**	23 March 2022	
		Job Reference:	BTC2448	

No.	Species	Height	Stem Diam.	Branch Spread		Branch & Canopy Clearances	Life Stage	PC	General Observations and Comments	Management Recommendations	ERC	Cat. Grade	RPA (m²)	RPA Radius (m)
T20	Common Holly	4	3x50 (ts)	N E S W	1.5 1.5 1.5 1.5	N/A 0	Y	G	▪ Stem trifurcates at a height of approximately 0.5m with tight forks.	▪ Remove tree in context of proposed development works.	40+	C1	3	1.04
T21	Weeping Pear	6	240	N E S W	3.5 3.5 3.5 3.5	2 0	SM	G	▪ No structural defects or physiological issues noted at time of survey.	▪ Retain tree in context of proposed development. ▪ Ensure protection of tree's RPA, canopy and stem, throughout construction through establishment of CEZ in accordance with appended temporary fencing specification.	40+	C1	26	2.88
T22	Dove Tree	7.5	1x190 1x150 (ts)	N E S W	3.5 3.5 3.5 3.5	2 1	SM	G	▪ Stem bifurcates at a height of approximately 0.3m with a tight fork. ▪ Evidently previously topped at a height of approximately 2m with resultant branch regrowth.	▪ Retain tree in context of proposed development. ▪ Ensure protection of tree's RPA, canopy and stem, throughout construction through establishment of CEZ in accordance with appended temporary fencing specification.	20+	B1	26	2.9
T23	Unknown Shrub	3.5	9x40 (ms)	N E S W	2.5 2.5 1 2.5	N/A 1	EM	G	▪ Multi stemmed from ground level. ▪ Stems in contact with stone wall.	▪ Retain tree in context of proposed development. ▪ Ensure protection of tree's RPA, canopy and stem, throughout construction through establishment of CEZ in accordance with appended temporary fencing specification.	10+	C1	7	1.44
T24	Silver Birch	12.5	240	N E S W	2.5 2.5 2.5 2.5	2 1.5	SM	G	▪ Growing in 0.7m tall raised area between access driveway to south at same levels, and garden to north at lower level.	▪ Retain tree in context of proposed development. ▪ Ensure protection of tree's RPA, canopy and stem, throughout construction through establishment of CEZ in accordance with appended temporary fencing specification.	10+	C1	26	2.88
T25	Purple Plum	7.5	250	N E S W	2 2 2 2	1.7 2	EM	G	▪ Stem bifurcates at a height of approximately 1.7m.	▪ Retain tree in context of proposed development. ▪ Ensure protection of tree's RPA, canopy and stem, throughout construction through establishment of CEZ in accordance with appended temporary fencing specification.	10+	C1	28	3

TREE SURVEY SCHEDULE FOR ARBORICULTURAL IMPACT ASSESSMENT				
Site:	Crow Trees Farm, Crow Trees Brow, Chatburn, Lancashire, BB7 4AA	**Surveyor:**	Phill Harris Chartered Arboriculturist	**Page:** 5 of 10
Agent:	Maybern Planning & Development	**Survey Date:**	23 March 2022	
		Job Reference:	BTC2448	

No.	Species	Height	Stem Diam.	Branch Spread		Branch & Canopy Clearances	Life Stage	PC	General Observations and Comments	Management Recommendations	ERC	Cat. Grade	RPA (m²)	RPA Radius (m)
T26	Purple Plum	8	400	N E S W	4 4 3 4	9 2	M	G	▪ Stem in contact with stone boundary wall, with resultant potential to cause structural displacement in future. ▪ Stem divides into multi multiple primary branches at a height of approximately 1.7m with tight forks.	▪ Retain tree in context of proposed development. ▪ Ensure protection of tree's RPA, canopy and stem, throughout construction through establishment of CEZ in accordance with appended temporary fencing specification.	10+	C1	72	4.8
T27	Japanese Maple	6	2x160 1x120 (ms)	N E S W	3 4 4 4	N/A 2	EM	G	▪ Stem bifurcates at a height of approximately 0.4m. ▪ 1m long 90mm diameter branch stub arises from east of stem at a height of approximately 0.4m.	▪ Retain tree in context of proposed development. ▪ Prune tree to remove branch stub. ▪ Ensure protection of tree's RPA, canopy and stem, throughout construction through establishment of CEZ in accordance with appended temporary fencing specification.	40+	C1	30	3.07
T28	Corkscrew Hazel	4	1x90 1x80 1x60 (ms)	N E S W	1.5 0.5 1.5 1.5	N/A 1	SM	G	▪ Multi-stemmed from ground level.	▪ Retain tree in context of proposed development. ▪ Ensure protection of tree's RPA, canopy and stem, throughout construction through establishment of CEZ in accordance with appended temporary fencing specification.	40+	C1	8	1.61
T29	Highclere Holly	9	280#	N E S W	2 1.5 3 3	4 3	EM	G	▪ Located on neighbouring land and subsequently not inspected in detail. ▪ Highly biased crown west due to partial suppression by neighbouring tree.	▪ Ensure protection of tree's RPA, canopy and stem, throughout construction through establishment of CEZ in accordance with appended temporary fencing specification.	10+	C1	35	3.36
T30	Leyland Cypress	16	500#	N E S W	6 6 6 6	3-S 4	EM	G	▪ Located on neighbouring land and subsequently not inspected in detail. ▪ Multiple included bark unions throughout branch system. ▪ Branches in contact with property.	▪ Ensure protection of tree's RPA, canopy and stem, throughout construction through establishment of CEZ in accordance with appended temporary fencing specification. ▪ Prune tree's crown to obtain a 1.5m clearance from existing building.	10+	C1	113	6
T31	Magnolia	5	150	N E S W	3.5 2 2 3	0.5 0.2	SM	G	▪ Moderate stem lean north-east.	▪ Remove tree in context of proposed development works.	40+	C1	10	1.8
T32	Sycamore	23	900#	N E S W	10 4 10 8	8-S 6	M	M	▪ Located on neighbouring land and subsequently not inspected in detail. ▪ Has evidently sustained several previous branch failures up to approximately 200mm diameter in upper crown.	▪ Ensure protection of tree's RPA, canopy and stem, throughout construction through establishment of CEZ in accordance with appended temporary fencing specification.	10+	C1	366	10.8

No.	Species	Height	Stem Diam.	Branch Spread		Branch & Canopy Clearances	Life Stage	PC	General Observations and Comments	Management Recommendations	ERC	Cat. Grade	RPA (m²)	RPA Radius (m)
T33	Flowering Cherry	7	170	N E S W	0 2 3.5 3	N/A 4	SM	G	▪ Highly biased crown south due to partial suppression by neighbouring trees. ▪ Crown partially topped.	▪ Retain tree in context of proposed development. ▪ Ensure protection of tree's RPA, canopy and stem, throughout construction through establishment of CEZ in accordance with appended temporary fencing specification.	10+	C1	13	2.04
T34	Sycamore	25	850#	N E S W	7 6 9.5 6	17 18	M	G	▪ Located on neighbouring land and subsequently not inspected in detail. ▪ Stem bifurcates at a height of approximately 7m with some swelling to stem below. NB: Proposed extension to existing barn encroach <2% of indicated RPA. As such, provided remaining RPA is afforded adequate protection, this is not projected to significantly impact long term structural and/or physiological condition.	▪ Ensure protection of tree's RPA, canopy and stem, throughout construction through establishment of CEZ in accordance with appended temporary fencing specification.	20+	B1	327	10.2
T35	Corkscrew Hazel	4	1x80 2x40 (ms)	N E S W	1 0 1.5 2	N/A 0	Y	G	▪ Multi stemmed from ground level. ▪ Highly biased crown south west.	▪ Retain tree in context of proposed development. ▪ Ensure protection of tree's RPA, canopy and stem, throughout construction through establishment of CEZ in accordance with appended temporary fencing specification.	40+	C1	4	1.18
T36	Whitebeam	11.5	380	N E S W	0 1 6 5	4-S 1.5	EM	G	▪ Several moderate to relatively large areas of necrotic bark to lower stem. ▪ Moderately dense ivy up mid stem. ▪ Highly biased crown south west due to partial suppression by neighbouring trees.	▪ Retain tree in context of proposed development. ▪ Ensure protection of tree's RPA, canopy and stem, throughout construction through establishment of CEZ in accordance with appended temporary fencing specification.	10+	C1	65	4.56
T37	Red Oak	16.5	400#	N E S W	1 5 7.5 7.5	4 2.5	SM	G	▪ Located on neighbouring land and subsequently not inspected in detail. ▪ Minor stem lean and highly biased crown south due to partial suppression by neighbouring trees.	▪ Ensure protection of tree's RPA, canopy and stem, throughout construction through establishment of CEZ in accordance with appended temporary fencing specification.	40+	B1	72	4.8
T38	Silver Birch	13.5	350#	N E S W	5 5 5 5	4.5 4.5	M	G	▪ Located on neighbouring land and subsequently not inspected in detail. ▪ Evidently previously topped at a height of approximately 5m with resultant branch regrowth from topping points.	▪ Ensure protection of tree's RPA, canopy and stem, throughout construction through establishment of CEZ in accordance with appended temporary fencing specification.	10+	C1	55	4.2

No.	Species	Height	Stem Diam.	Branch Spread		Branch & Canopy Clearances	Life Stage	PC	General Observations and Comments	Management Recommendations	ERC	Cat. Grade	RPA (m²)	RPA Radius (m)
T39	Small-Leaved Lime 'Greenspire'	12	560	N E S W	4 3 5 6	2.5 4.5	EM	G	▪ Stem divides into multiple primary branches with tight forks and included bark at a height of approximately 2.5m. ▪ Possibly within site boundaries.	▪ Retain tree in context of proposed development. ▪ Ensure protection of tree's RPA, canopy and stem, throughout construction through establishment of CEZ in accordance with appended temporary fencing specification.	10+	C1	142	6.72
T40	Common Lime	19.5	850#	N E S W	7.5 7.5 7.5 7.5	5 4.5	M	G	▪ Located on neighbouring land and subsequently not inspected in detail. ▪ Very dense adventitious growth to stem base and to centre of crown between primary branches.	▪ Ensure protection of tree's RPA, canopy and stem, throughout construction through establishment of CEZ in accordance with appended temporary fencing specification.	40+	A1	327	10.2
T41	Sycamore	16.5	1100#	N E S W	7 9 6 9.5	4.5-E 4	M	G	▪ Located on neighbouring land and subsequently not inspected in detail. ▪ Moderately dense ivy up mid stem.	▪ Ensure protection of tree's RPA, canopy and stem, throughout construction through establishment of CEZ in accordance with appended temporary fencing specification.	40+	A1	547	13.2
T42	Sycamore	15.5	950#	N E S W	1 8 8 9	4-E 5	M	G	▪ Located on neighbouring land and subsequently not inspected in detail. ▪ Very dense ivy up stem. ▪ Highly biased crown south due to partial suppression by neighbouring trees.	▪ Ensure protection of tree's RPA, canopy and stem, throughout construction through establishment of CEZ in accordance with appended temporary fencing specification.	40+	B1	408	11.4
T43	Norway Maple	10	430	N E S W	4.5 4.5 4.5 4.5	3 3	SM	G	▪ No structural defects or physiological issues noted at time of survey.	▪ Retain tree in context of proposed development. ▪ Ensure protection of tree's RPA, canopy and stem, throughout construction through establishment of CEZ in accordance with appended temporary fencing specification.	40+	B1	84	5.16
T44	Sycamore	15	1x480 1x180 (ts)	N E S W	5.5 5.5 5.5 5.5	N/A 2.5	EM	G	▪ Severe curvature to lower stem as evidently previously cut as part of hedge laying management works.	▪ Retain tree in context of proposed development. ▪ Ensure protection of tree's RPA, canopy and stem, throughout construction through establishment of CEZ in accordance with appended temporary fencing specification.	40+	C1	119	6.15
T45	Common Ash	15	2x350 (ts)	N E S W	5.5 5.5 5.5 5.5	5-S 3.5	SM	G	▪ Stem bifurcates at a height of approximately 1m with cupped union.	▪ Retain tree in context of proposed development. ▪ Ensure protection of tree's RPA, canopy and stem, throughout construction through establishment of CEZ in accordance with appended temporary fencing specification.	10+	C1	111	5.94

No.	Species	Height	Stem Diam.	Branch Spread		Branch & Canopy Clearances	Life Stage	PC	General Observations and Comments	Management Recommendations	ERC	Cat. Grade	RPA (m²)	RPA Radius (m)
T46	Common Oak	16.5	710	N E S W	10 7.5 5 8	3-W 3	EM	G	▪ Stem bifurcates at a height of approximately 6m, with a partially occluded 350mm diameter wound resultant of previous branch failure at this point. ▪ Moderate amount of deadwood up to approximately 60mm diameter. ▪ Woodpecker hole to secondary stem to west at a height of approximately 6m.	▪ Retain tree in context of proposed development. ▪ Ensure protection of tree's RPA, canopy and stem, throughout construction through establishment of CEZ in accordance with appended temporary fencing specification.	40+	A1/2	228	8.52
T47	Common Hazel	9	2x190 (ts)	N E S W	3 5.5 3 0	3 N/A	EM	G	▪ Twin stemmed from ground level. ▪ Severe stem lean and highly biased crown east due to partial suppression by neighbouring trees.	▪ Remove tree in context of proposed development. NB: Tree can be coppiced tree just above ground level and managed within hedge H3.	40+	C1	33	3.22
T48	Common Ash	17	750	N E S W	8 6.5 8 8.5	3.5 4	M	M	▪ Stem bifurcates at a height of approximately 2m with a tight compression fork with included bark.	▪ Remove tree in order to construct development as proposed.	10+	C1	254	9
T49	Common Oak	16	530	N E S W	6.5 6.5 6.5 6.5	4 4	SM	G	▪ Moderate amount of deadwood up to approximately 40mm diameter.	▪ Retain tree in context of proposed development. ▪ Ensure protection of tree's RPA, canopy and stem, throughout construction through establishment of CEZ in accordance with appended temporary fencing specification.	40+	A1/2	127	6.36
T50	Sycamore	14.5	700	N E S W	7.5 7 7.5 6	4.5 5	M	G	▪ Growing in hedge on mound and in low stone wall. ▪ Very dense ivy up stem and into primary branches. ▪ Moderate amount of deadwood up to approximately 40mm diameter.	▪ Retain tree in context of proposed development. ▪ Remove ivy from stem. ▪ Ensure protection of tree's RPA, canopy and stem, throughout construction through establishment of CEZ in accordance with appended temporary fencing specification.	40+	A1/2	222	8.4
T51	Common Hawthorn	6	3x100 (ts)#	N E S W	3.5 1.5 2 3.5	2 N/A	SM	G	▪ Located on neighbouring railway land and subsequently not inspected in detail. ▪ Stem trifurcates at a height of approximately 1m with tight forks.	▪ Ensure protection of tree's RPA, canopy and stem, throughout construction through establishment of CEZ in accordance with appended temporary fencing specification.	40+	C1	14	2.08
T52	Common Hawthorn	7	4x80 (ms)#	N E S W	3.5 3.5 3.5 3.5	N/A 0.5	SM	G	▪ Located on neighbouring railway land and subsequently not inspected in detail. ▪ Stem divides into multiple secondary stems at a height of approximately 0.5m.	▪ Ensure protection of tree's RPA, canopy and stem, throughout construction through establishment of CEZ in accordance with appended temporary fencing specification.	40+	C1	12	1.92

No.	Species	Height	Stem Diam.	Branch Spread		Branch & Canopy Clearances	Life Stage	PC	General Observations and Comments	Management Recommendations	ERC	Cat. Grade	RPA (m²)	RPA Radius (m)
T53	Common Ash	16	1x350 1x250 1x200 1x150 (ms)	N E S W	6.5 6.5 4 3	N/A 5	EM	MD	▪ Located on neighbouring railway land and subsequently not inspected in detail. ▪ Multi stemmed from ground level. ▪ Crown showing signs of a severe and evidently terminal reduction in vitality, evidently resultant of colonisation by Ash Dieback Disease (ADD).	▪ Inform respective land owner of tree's condition and subsequent recommendation for its removal due to poor physiological condition and resultant high risk of branch and/or stem failure onto neighbouring targets (e.g. railway and driveway).	<10	U	112	5.97
T54	Common Ash	25	800#	N E S W	9 9 9 9	N/A 10	M	M	▪ Located on opposite side of access road to site. ▪ Not inspected in detail. ▪ Dense ivy up stem. ▪ Crown showing signs of a reduction in vitality evidently resultant of colonisation by ADD.	▪ Inform respective land owner tree's condition and subsequent recommendation to instruct consultant to inspect tree during summer to assess extent of effects of ADD colonisation.	<10	U	290	9.6
T55	Sycamore	19.5	750#	N E S W	8.5 8.5 8.5 8.5	7 8	M	G	▪ Located on opposite side of access road to site. ▪ Not inspected in detail. ▪ Ivy up stem.	▪ Ensure protection of tree's RPA, canopy and stem, throughout construction through establishment of CEZ in accordance with appended temporary fencing specification.	40+	B1/2	254	9
T56	Sycamore	17.5	750#	N E S W	9 9 9 9	7 6	M	G	▪ Located on opposite side of access road to site. ▪ Not inspected in detail. ▪ Ivy up stem.	▪ Ensure protection of tree's RPA, canopy and stem, throughout construction through establishment of CEZ in accordance with appended temporary fencing specification.	40+	A1/2	254	9
T57	Poplar	14	500	N E S W	3 2 3 3	N/A 5	SM	G	▪ Very dense ivy up stem. ▪ Moderate stem lean north. ▪ Stem bifurcates at a height of approximately 2m, evidently with a tight fork, although it is ivy covered.	▪ Remove tree in order to construct development as proposed.	10+	C1	113	6
G1	approx. 5no. Goat Willow	≤ 7	≤ 70	N E S W	≤ 1.5 ≤ 1.5 ≤ 1.5 ≤ 1.5	N/A ≥ 0.5	Y	G	▪ Very closely spaced group of approximately five very young stems. ▪ Limited future potential due to species, location, and form of group, and subsequently considered unsuitable for retention.	▪ Remove group due to limited future potential.	<10	U	≤ 2	≤ 0.84
G2	3no. Wych Elm	≤ 17.5	≤ 1x300 1x150 (ts)#	N E S W	≤ 3 ≤ 5 ≤ 4 ≤ 6.5	N/A ≥ 4	SM	G	▪ Very closely spaced group. ▪ Located on neighbouring land and subsequently not inspected in detail. ▪ All evidently multi-stemmed from ground level. ▪ Short projected remaining life expectancy due to species susceptibility to Dutch Elm Disease.	▪ Ensure protection of trees' RPAs, canopies and stems, throughout construction through establishment of CEZ in accordance with appended temporary fencing specification.	<10	U	≤ 51	≤ 4.02

No.	Species	Height	Stem Diam.	Branch Spread		Branch & Canopy Clearances	Life Stage	PC	General Observations and Comments	Management Recommendations	ERC	Cat. Grade	RPA (m²)	RPA Radius (m)
G3	approx. 4no. Common Ash	≤ 22	≤ 500#	N E S W	≤ 8 ≤ 7 ≤ 7 ≤ 7	N/A ≥ 4	EM	M	▪ Very closely spaced group located on neighbouring railway land and subsequently not inspected in detail. ▪ All have very dense ivy up stems. ▪ Large number of failed twigs on ground below crowns have symptoms of colonisation by ADD, and trees subsequently considered to have short projected remaining life expectancies.	▪ Ensure protection of trees' RPAs, canopies and stems, throughout construction through establishment of CEZ in accordance with appended temporary fencing specification. ▪ Inform respective land owner trees' condition and subsequent recommendation to instruct consultant to inspect trees during summer to assess extent of effects of ADD colonisation.	<10	U	≤ 113	≤ 6
G4	3no. Goat Willow	≤ 14	≤ 1x350 1x200 (ts)	N E S W	≤ 6.5 ≤ 4 ≤ 4 ≤ 4	N/A ≥ 5	SM	G	▪ Very closely spaced group. ▪ All are twin stemmed.	▪ Remove group in order to construct development as proposed.	10+	C1	≤ 74	≤ 4.84
H1	Common Hawthorn, Blackthorn	≈ 1.7	N/A	≈ 1.5 wide		N/A N/A	SM	G	▪ Length of managed hedge along access road. ▪ Mainly Hawthorn, with small Blackthorn element to north.	▪ Remove majority of hedge in order to construct development as proposed. ▪ Retain approximately 25m section to south as indicated on TIP. ▪ Ensure protection of remaining hedge throughout proposed development works.	40+	C1	N/A	≈ 1
H2	Common Hawthorn	≤ 8	N/A	≤ 4 wide		N/A N/A	EM	G	▪ Length of mostly managed hedge, with relatively short outgrown section to north. ▪ Evidently previously laid.	▪ Remove two sections, of approximately 8m and 14m length respectively, from hedge's north in order to construct development as proposed (see TIP). ▪ Retain remaining hedge in context of proposed development. ▪ Ensure protection of remaining hedge throughout construction through establishment of CEZ in accordance with appended temporary fencing specification.	40+	C1	N/A	≈ 1
H3	Common Hawthorn	≈ 1.5	N/A	≈ 2 wide		N/A N/A	SM	G	▪ Length of managed hedge forming field division. ▪ Evidently previously laid.	▪ Remove approximately 10m section to centre to construct development as proposed. ▪ Retain remaining hedge in context of proposed development. ▪ Ensure protection of remaining hedge throughout construction through establishment of CEZ in accordance with appended temporary fencing specification.	40+	C1	N/A	≈ 1

BS5837:2012 Table 1 – Cascade Chart for Tree Quality Assessment

Category and definition	Criteria (including subcategories where appropriate)			Identification on plan
Trees unsuitable for retention (see Note)				
Category U Those in such a condition that they cannot realistically be retained as living trees in the context of the current land use for longer than 10 years	▪ Trees that have a serious, irremediable, structural defect, such that their early loss is expected due to collapse, including those that will become unviable after removal of other category U trees (e.g. where, for whatever reason, the loss of companion shelter cannot be mitigated by pruning) ▪ Trees that are dead or are showing signs of significant, immediate, and irreversible overall decline ▪ Trees infected with pathogens of significance to the health and/or safety of other trees nearby, or very low quality trees suppressing adjacent trees of better quality *Note: Category U trees can have existing or potential conservation value which it might be desirable to preserve; see BS5837:2012 paragraph 4.5.7.*			Red
	1. Mainly arboricultural qualities	**2. Mainly landscape qualities**	**3. Mainly cultural values, including conservation**	
Trees to be considered for retention				
Category A **Trees of high quality** with an estimated remaining life expectancy of at least 40 years	Trees that are particularly good examples of their species, especially if rare or unusual; or those that are essential components of groups or formal or semi-formal arboricultural features (e.g. the dominant and/or principal trees within an avenue)	Trees, groups or woodlands of particular visual importance as arboricultural and/or landscape features	Trees, groups or woodlands of significant conservation, historical, commemorative or other value (e.g. veteran trees or wood-pasture)	Green
Category B Those of moderate quality and value: those in such a condition as to make a significant contribution. A minimum of 20 years is suggested.	Trees that might be included in the high category, but are downgraded because of impaired condition. Examples include the presence of remediable defects including unsympathetic past management and minor storm damage	Trees present in numbers, usually as groups or woodlands, so they form distinct landscape features which attract a higher collective rating than they might as individuals. But which are not, individually, essential components of formal or semi-formal arboricultural features. For example, trees of moderate quality within an avenue that includes better, A category specimens. Or trees which are internal to the site, therefore individually having little visual impact on the wider locality	Trees with clearly identifiable conservation or other cultural benefits	Blue
Category C Those trees of low quality and value: currently in adequate condition to remain until new planting could be established - a minimum of 10 years is suggested - or young trees with a stem diameter below 150 mm	Trees not qualifying in higher categories	Trees present in groups or woodlands, but without this conferring on them significantly greater landscape value, and/or trees offering low or only temporary screening benefit	Trees with very limited conservation or other cultural benefits	Grey
	Note – Whilst C category trees will usually not be retained where they would impose a significant constraint on development, young trees with a stem diameter of less than 150mm should be considered for relocation			

- TEMPORARY PROTECTIVE FENCING & GROUND PROTECTION SPECIFICATION -

Construction Exclusion Zones (CEZs), shall be enclosed by **Temporary Protective Fencing** and/or, where necessary, **Temporary Ground Protection Measures**. The fencing/ground protection Type(s), locations, and extents shall be agreed, in writing, with the Local Planning Authority (LPA). In turn, the **Temporary Protective Fencing** and/or **Temporary Ground Protection Measures** shall:

1. be constructed as in accordance with the Type 1, Type 2 or Type 3 'Temporary Protective Fencing Construction' sections and, where applicable the 'Temporary Ground Protection Measures' section, as detailed herein and agreed, in advance with the LPA;
2. be retained in place throughout the development process until completion of the project, and only removed following receipt of written permission from the LPA;
3. be sited in the area(s) defined by the Root Protection Areas on the associated Tree Impact Plan, or as the CEZs on the Tree Protection Plan;
4. be erected prior to any construction, demolition or excavation works and remain in place for the duration of the project;
5. preclude any delivery of site accommodation and/or materials and/or plant machinery;
6. preclude all construction related activity, with the sole exception of specified arboricultural works and any other works to be carried out under supervision that have been agreed by all parties;
7. preclude the storage of all development related materials and substances including fuels, oils, additives, cement and/or any other deleterious substance; and
8. be affixed with a 600mm x 300mm warning sign reading "TREE PROTECTION AREA KEEP OUT" (see Figure 1, below), at every 10.0 metre length of protective fencing.
9. Important: Any incursion into CEZs must be by prior arrangement, following consultation with the LPA.

Figure 1: CEZ Warning Sign

– TREE PROTECTION AREA –
KEEP OUT!

(TOWN & COUNTRY PLANNING ACT 1990)
THE TREES ENCLOSED BY THIS FENCE ARE PROTECTED BY PLANNING CONDITIONS AND/OR SUBJECTS OF A 'TREE PRESERVATION ORDER', THE CONTRAVENTION OF WHICH MAY LEAD TO CRIMINAL PROSECUTION

THE FOLLOWING MUST BE OBSERVED BY ALL PERSONNEL:

- THE PROTECTIVE FENCING MUST NOT BE MOVED
- NO PERSON SHALL ENTER THE CONSTRUCTION EXCLUSION ZONE
- NO MACHINE, PLANT OR VEHICLES SHALL ENTER THE EXCLUSION ZONE
- NO MATERIALS SHALL BE STORED IN THE EXCLUSION ZONE
- NO SPOIL SHALL BE DEPOSITED IN THE EXCLUSION ZONE
- NO EXCAVATION SHALL OCCUR IN THE EXCLUSION ZONE
- NO FIRES SHALL BE LIT IN THE EXCLUSION ZONE

ANY INCURSION INTO THE EXCLUSION ZONE MUST BE WITH THE WRITTEN PERMISSION OF THE LOCAL PLANNING AUTHORITY

Type 1 (i.e. 'Default') Temporary Protective Fencing Construction (see Figure 2, below)

1. Temporary protective fencing panels shall be weldmesh "Heras" panels of at least 2.0 metres in height.
2. The panels shall butt together and be securely fixed to a scaffold framework, as per points 3 to 5 of Figure 2, overleaf.
3. The scaffold framework shall comprise of upright poles of at least 3.0 metres in length driven no less than 0.6 metres into the ground at maximum 3.0 metre centres with horizontal and diagonal poles fixed to the uprights, as per points 4 to 5.
4. The two horizontal rail poles shall be attached to the uprights at heights of 0.6 and 1.8 metres with 3 no. clamps to each joint.
5. The diagonal scaffold pole struts be clamped to the top rail of the scaffold framework at a 45º angle and extend back into the CEZ and clamped to a 0.7 metre length of scaffold tube that shall be driven no less than 0.5m into the ground.
6. No fixing shall be made to any tree and all possible precautions shall be taken to prevent damage to tree roots when locating posts.
7. A 600mm x 300mm warning sign reading "TREE PROTECTION AREA KEEP OUT" (see Figure 1) shall be fixed to every 10.0 metre length of protective fencing.
8. On completion of erection, and prior to any demolition or construction works, site preparation, excavation or delivery of plant and materials, the Consulting Arboriculturist or the LPA Tree Officer, as agreed, shall inspect the Temporary Protective Fencing.

Figure 2: BS5837:2012 Default specification for protective barrier

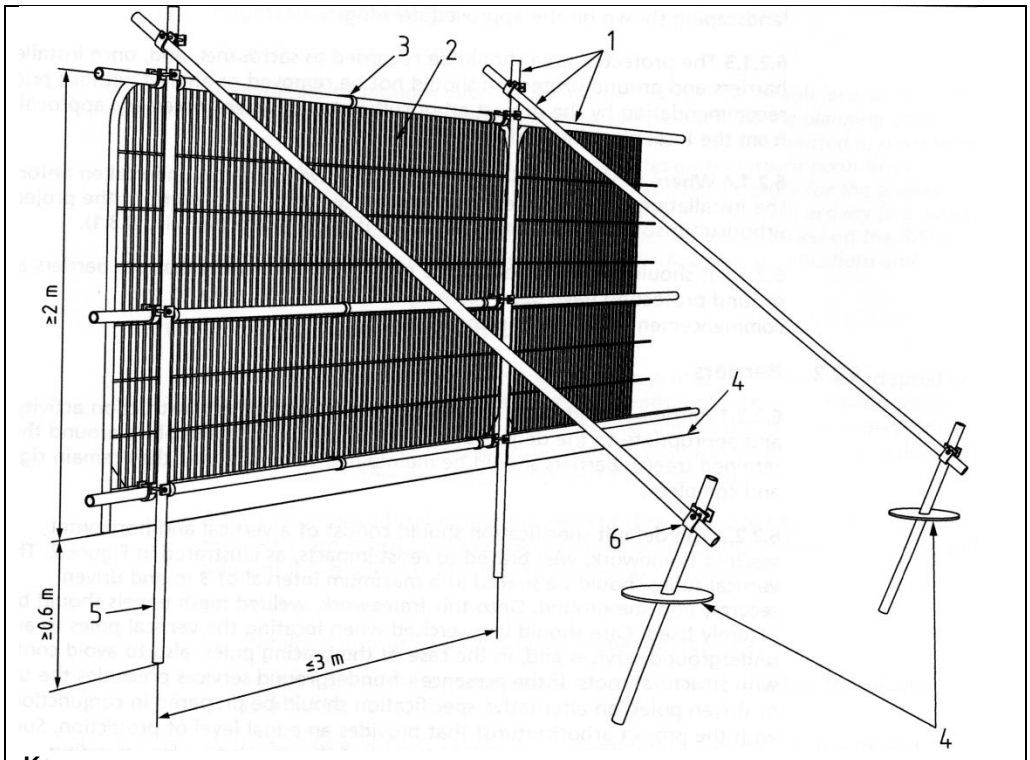

Key

1. Standard scaffold poles.
2. Heavy gauge 2 metre tall galvanised tube and welded mesh infill panels
3. Panels secured to uprights and cross members with wires ties
4. Ground level
5. Uprights driven into the ground until secure (minimum depth 0.6 metres)
6. Standard scaffold clamps

Type 2 Temporary Protective Fencing Construction (see Figure 3(a), below)

1. Temporary protective fencing panels shall be weldmesh "Heras" panels of at least 2.0 metres in height.
2. The panels shall stand on rubber or concrete feet.
3. The panels shall butt together, and be joined together using a minimum of two anti-tamper couplers, installed so that they can only be removed from inside the fence.
4. The distance between the fence couplers shall be at least 1.0 metre, and shall be uniform throughout the fence.
5. The panels shall be supported on the inner side by stabiliser struts, which shall be clamped to the scaffold framework at a 45º angle and extend back into the CEZ and shall be attached to a base plate, which shall be secured to the ground with pins (Figure 3a).
6. No fixing shall be made to any tree and all possible precautions shall be taken to prevent damage to tree roots when locating posts.
7. A 600mm x 300mm warning sign reading "TREE PROTECTION AREA KEEP OUT" (see Figure 1) shall be fixed to every 10.0 metre length of protective fencing.
8. On completion of erection, and prior to any demolition or construction works, site preparation, excavation or delivery of plant and materials, the Consulting Arboriculturist or the LPA Tree Officer, as agreed, shall inspect the Temporary Protective Fencing.

Figure 3(a): Type 2 Fencing (BS5837:2012 above-ground strut stabilising system with ground pins)

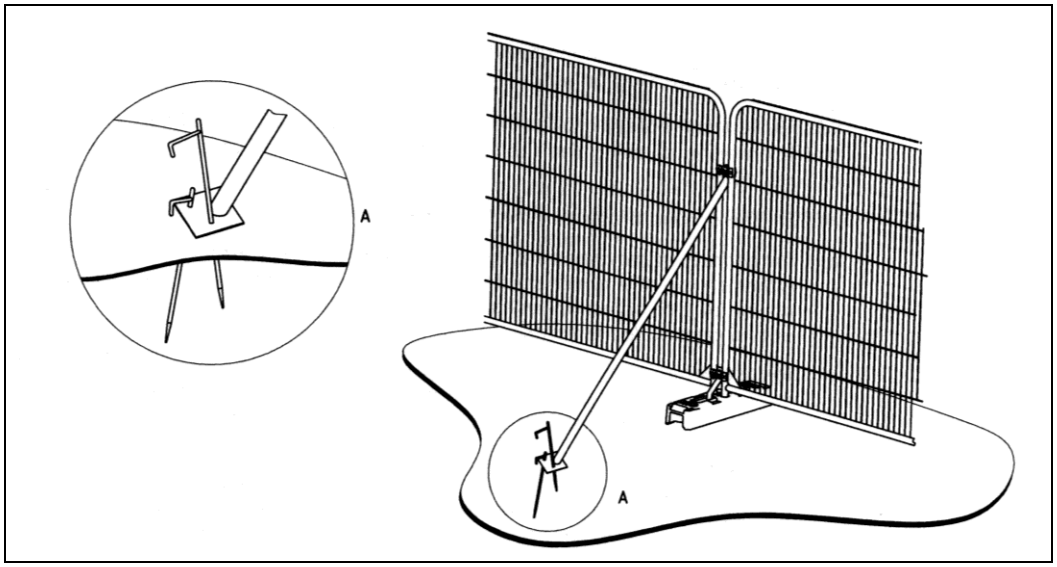

Type 3 Temporary Protective Fencing Construction (see Figure 3(b), overleaf)

1. Temporary protective fencing panels shall be weldmesh "Heras" panels of at least 2.0 metres in height.
2. The panels shall stand on rubber or concrete feet.
3. The panels shall butt together, and be joined together using a minimum of two anti-tamper couplers, installed so that they can only be removed from inside the fence.
4. The distance between the fence couplers shall be at least 1.0 metre, and shall be uniform throughout the fence.
5. The panels shall be supported on the inner side by stabiliser struts, which shall be clamped to the scaffold framework at a 45º angle and extend back into the CEZ and shall be attached to a block tray base (Figure 3b).
6. No fixing shall be made to any tree and all possible precautions shall be taken to prevent damage to tree roots when locating posts.
7. A 600mm x 300mm warning sign reading "TREE PROTECTION AREA KEEP OUT" (see Figure 1) shall be fixed to every 10.0 metre length of protective fencing.
8. On completion of erection, and prior to any demolition or construction works, site preparation, excavation or delivery of plant and materials, the Consulting Arboriculturist or the LPA Tree Officer, as agreed, shall inspect the Temporary Protective Fencing.

Figure 3(b): Type 3 Fencing (BS5837:2012 above-ground stabilising system with strut on block tray)

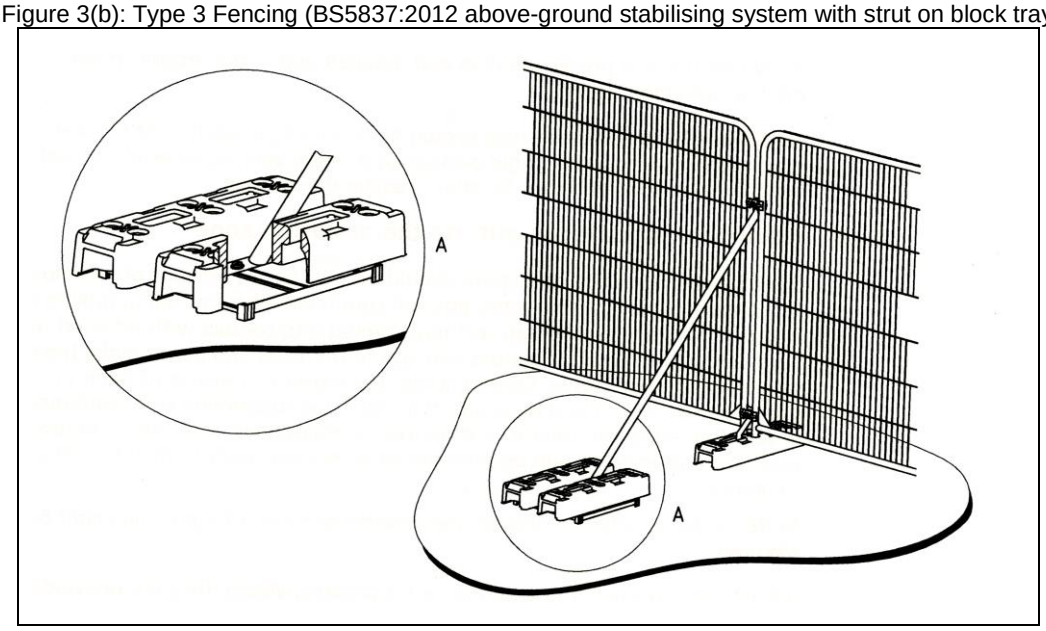

Temporary Ground Protection

1. Any necessary Temporary Ground Protection areas shall conform to Figure 4, below, unless otherwise agreed with the LPA.
2. The Ground Protection Area shall be left undisturbed and covered by a semi-permeable geotextile membrane which shall, in turn, be covered by a compressible layer consisting of a material such as woodchip.
3. Side-butting scaffold boards shall then be fitted to cover the Ground Protection Area.
4. On completion of installation, and prior to any demolition or construction works, site preparation, excavation or delivery of plant and materials, the Consulting Arboriculturist or the LPA Tree Officer, as agreed, shall inspect the Temporary Ground Protection.
5. The Temporary Ground Protection shall remain in place until completion of the project and only removed following receipt of written permission from the LPA.

Figure 4: Temporary Ground Protection – Recommended Construction

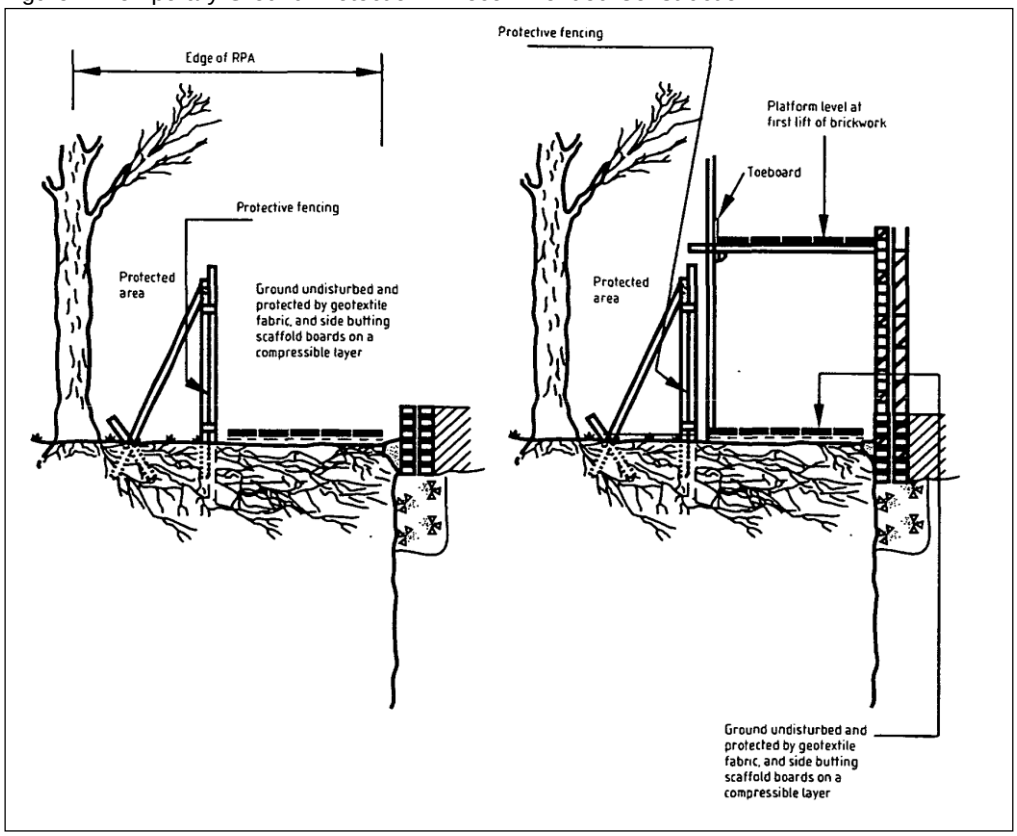

Important: The original version of this plan was produced in colour, which is essential to the plan's interpretation and usability. As such, a monochrome copy should not be relied upon

KEY

T = Individual Tree
G = Group of Trees
H = Hedge

Please refer to associated Tree Survey Schedule and appendices for specific details in respect of items below:

Tree Categorisations:

Those to be Considered for Retention:

Category 'A' Tree/Group/Hedge
Those of a High Quality with an Estimated Remaining Life Expectancy of at Least 40 Years

Category 'B' Tree/Group/Hedge
Those of a Moderate Quality with an Estimated Remaining Life Expectancy of at Least 20 Years

Category 'C' Tree/Group/Hedge
Those of Low Quality with an Estimated Remaining Life Expectancy of at Least 10 Years, or Young Trees

Those Considered Unsuitable for Retention:

Category 'U' Tree/Group/Hedge
Those in Such a Condition that they Cannot Realistically be Retained as Living Trees in the Context of the Current Land Use for Longer Than 10 Years

Note: The stem location of tree T53 was not included on the topographical survey plan provided, and its location was subsequently plotted by the arboricultural surveyor at the time of the survey using GPS siting and measurement from existing site features. As such, the plotted location of this tree cannot therefore be considered to be wholly accurate

Root Protection Areas (RPAs):

RPAs
Area(s) of Ground Around Trees that Should be Protected Throughout Development Works with Protective Fencing to form a Construction Exclusion Zone - see Appended Temporary Protective Fencing Specification

Project:
CROW TREES FARM
CROW TREES BROW
CHATBURN
LANCASHIRE
BB7 4AA

Agent for Client:
MAYBERN PLANNING & DEVELOPMENT

Title:
TREE CONSTRAINTS PLAN
in Relation to Proposed 39 Unit Residential Development, Renovation of Farmhouse, and Conversion of Farm Buildings for Residential Usage

Scale:	1:500@A1
Date:	March 2022
Drawn by:	PH & TW
Checked by:	JL

Bowland Tree Consultancy Ltd
e. info@bowlandtreeconsultancy.co.uk
t. 01772 437100

Ref: BTC2448-TCP Rev:

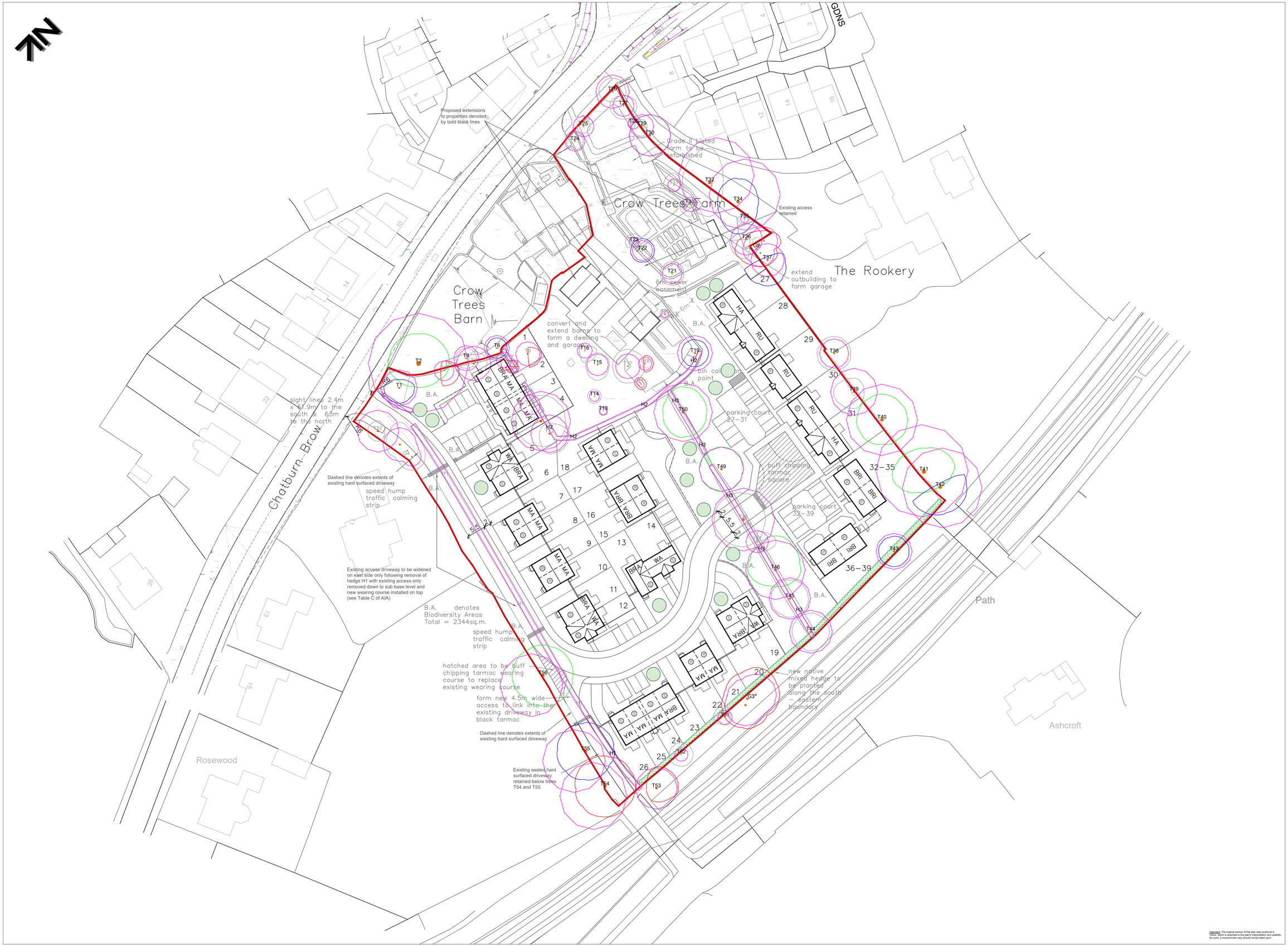

KEY

T = Individual Tree
G = Group of Trees
H = Hedge

Please refer to associated Arboricultural Impact Assessment and appendices for specific details in respect of items below:

Tree Categorisations:

Those to be Considered for Retention:

Category 'A' Tree/Group/Hedge
Those of a High Quality with an Estimated Remaining Life Expectancy of at Least 40 Years

Category 'B' Tree/Group/Hedge
Those of a Moderate Quality with an Estimated Remaining Life Expectancy of at Least 20 Years

Category 'C' Tree/Group/Hedge
Those of Low Quality with an Estimated Remaining Life Expectancy of at Least 10 Years, or Young Trees

Those Considered Unsuitable for Retention:

Category 'U' Tree/Group/Hedge
Those in Such a Condition that they Cannot Realistically be Retained as Living Trees in the Context of the Current Land Use for Longer Than 10 Years

Note 1: The stem location of tree T53 was not included on the topographical survey plan provided, and its location was subsequently plotted by the arboricultural surveyor at the time of the survey using GPS siting and measurement from existing site features. As such, the plotted location of this tree cannot therefore be considered to be wholly accurate
Note 2: Trees with their identifying numbers labelled in grey are proposed for removal in the context of the proposed development

Root Protection Areas (RPAs):

RPAs
Area(s) of Ground Around Trees that Should be Protected Throughout Development Works with Protective Fencing to form a Construction Exclusion Zone - see Appended Temporary Protective Fencing Specification

New Tree Planting:

Indicative Location(s) Considered Potentially Suitable for New Tree Planting with Trees of Suitable Species for Locations

Project:
CROW TREES FARM
CROW TREES BROW
CHATBURN
LANCASHIRE
BB7 4AA

Agent for Client:
MAYBERN PLANNING & DEVELOPMENT

Title:
TREE IMPACT PLAN
in Relation to Proposed 39 Unit Residential Development, Renovation of Farmhouse, and Conversion of Farm Buildings for Residential Usage

Scale:	1:500@A1
Date:	September 2022
Drawn by:	PH, TW & JL
Checked by:	PH

Bowland Tree Consultancy Ltd
e. info@bowlandtreeconsultancy.co.uk
t. 01772 437192

Ref: BTC2448-TIP Rev: A