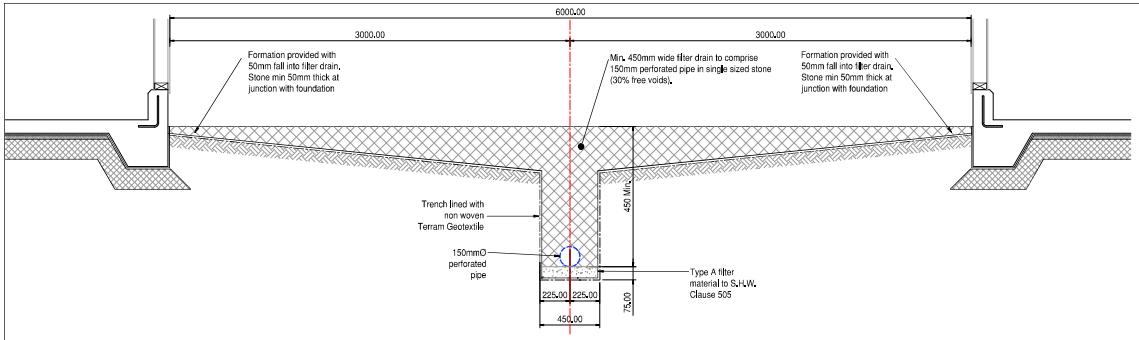

Typical Section Thro' Filter Drain (Section A-A)

Scale 1:20

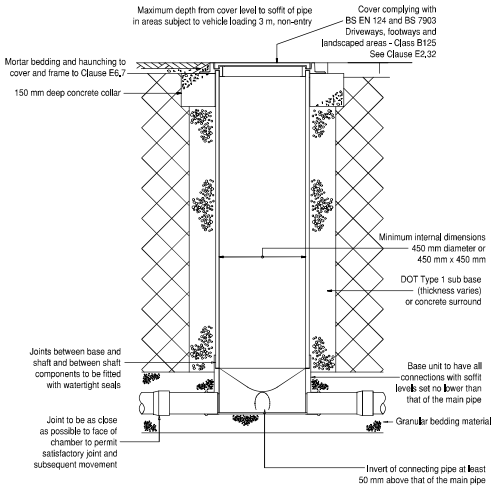

Typical Inspection Chamber Detail (Flecible Material Detail)

NTS

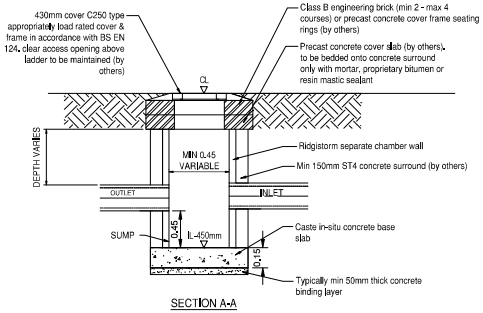

SECTION A-A

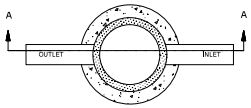

PLAN

Rigistorm Separate Catchpit

NTS

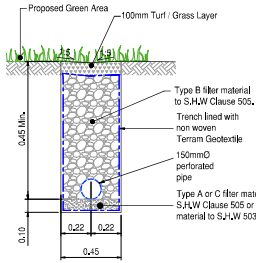

Typical Filter Drain Detail

Scale 1:20

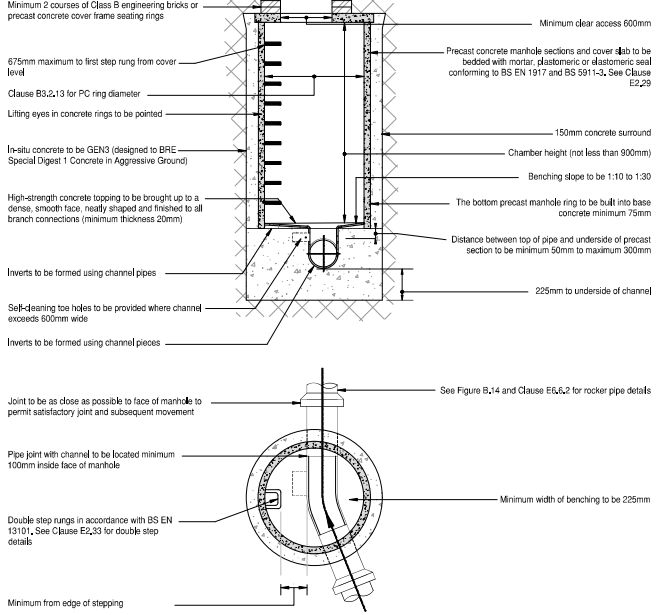

Typical Manhole Detail (Max depth from cover to soffit of pipe 3.0m)

Scale 1:20

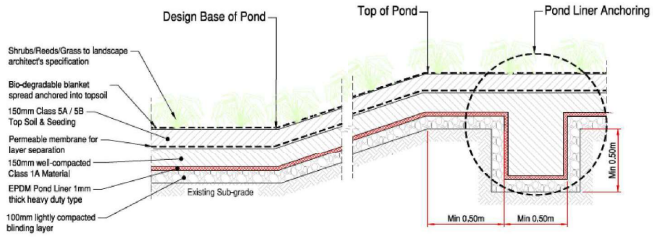

Pond/Swale Construction Build Up (to be confirmed by Landscape Architects)

NTS

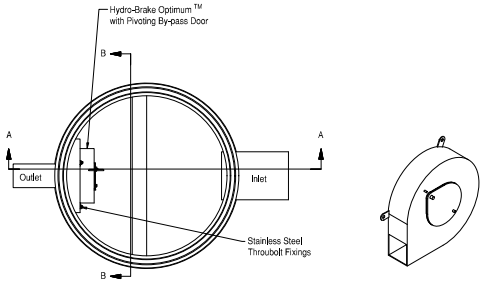

Plan

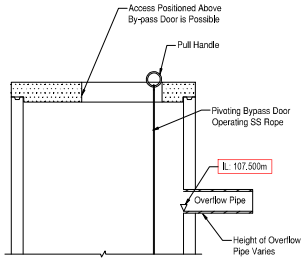

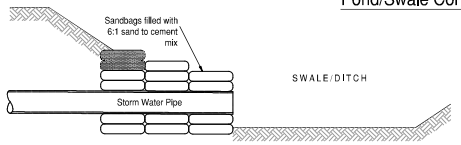

Typical Sandbag Headwall Detail

Scale 1:20

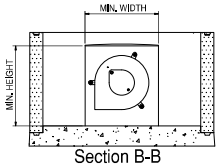

Section B-B

(View on Mounting Block)

Note - A Pre-formed Hydro-Brake® Chamber base is Available from Hydro International with Hydro-Brake Optimum TM Pre-fitted

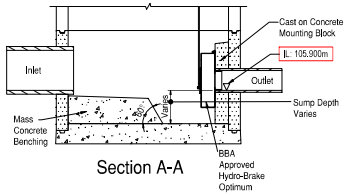

Section A-A

Typical Hydrobrake Chamber Detail With Overflow Pipe

Scale 1:20

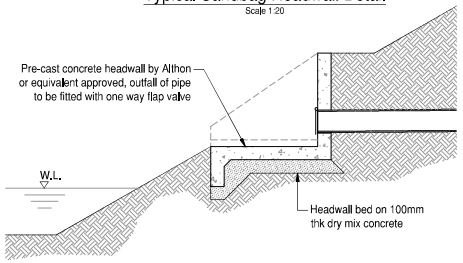

Typical Concrete Headwall Detail

Scale 1:20

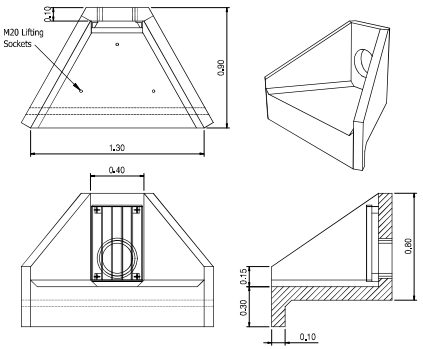

Headwall Outlet - Athlon H3C Headwall (Up to DN300)

Scale 1:20

Safety, Health & Environmental Information:

In addition to the hazards and risks normally associated with the types of work detailed on this drawing, please note the significant hazards identified by symbols below.

INDICATES A RESIDUAL RISK AS A WARNING

INDICATES A RESIDUAL RISK FOR INFORMATION

and described below:

Construction/Maintenance/Cleaning/Demolition

Refer to Drawing:

General Notes:

1. Do not scale from this drawing.
2. All dimensions are in millimetres (mm), all levels in metres (m) unless noted otherwise.
3. Discrepancies or omissions are to be reported to the Engineer prior to work commencing.
4. Materials and workmanship are to comply in all respects with current British Standard Specifications, Codes of Practice, and Building Regulations Approved Documents.
5. The copyright of this drawing is vested in the Engineer and must not be copied or reproduced without written consent.
6. The Contractor is to check and verify all building and site dimensions, levels and sewer invert levels at connection points before work commences.
7. This drawing is to be read in conjunction with all relevant specifications and drawings issued by the Engineer, Architect and other Specialists.
8. For drainage plans refer to drawing:
   - RCF-BML-ERD-ZZ-DR-C-0550 Combined Drainage Layout

PRELIMINARY DRAWING

This drawing is not to be used for construction

Rev	By	Chk'd	Date	Description
P03	DH	AM	15/08/23	Details Updated
P02	DH	AM	2/07/23	Details Updated
P01	RA	GM	13/04/23	Preliminary

Client

FI REAL ESTATE MANAGEMENT

BarnsleyMarshall Limited
1 Birch Court
Blackpole East
Worcester
WR3 8SG

Tel: 01905 330550
Email: design@barnsleymarshall.co.uk

Project

Cow Shed
Elmridge Lane, Preston,
PR3 2NY

Drawing

Drainage Details 02

Drawn by		Date	
Checked by	RA/GM	Date	05/04/2023

Drawing No.: CSH-BML-XX-XX-DR-C-0502

Revision: P03

BML Job No.: 1000-05

Drawing Scale at A1: NTS

CAD Filename: