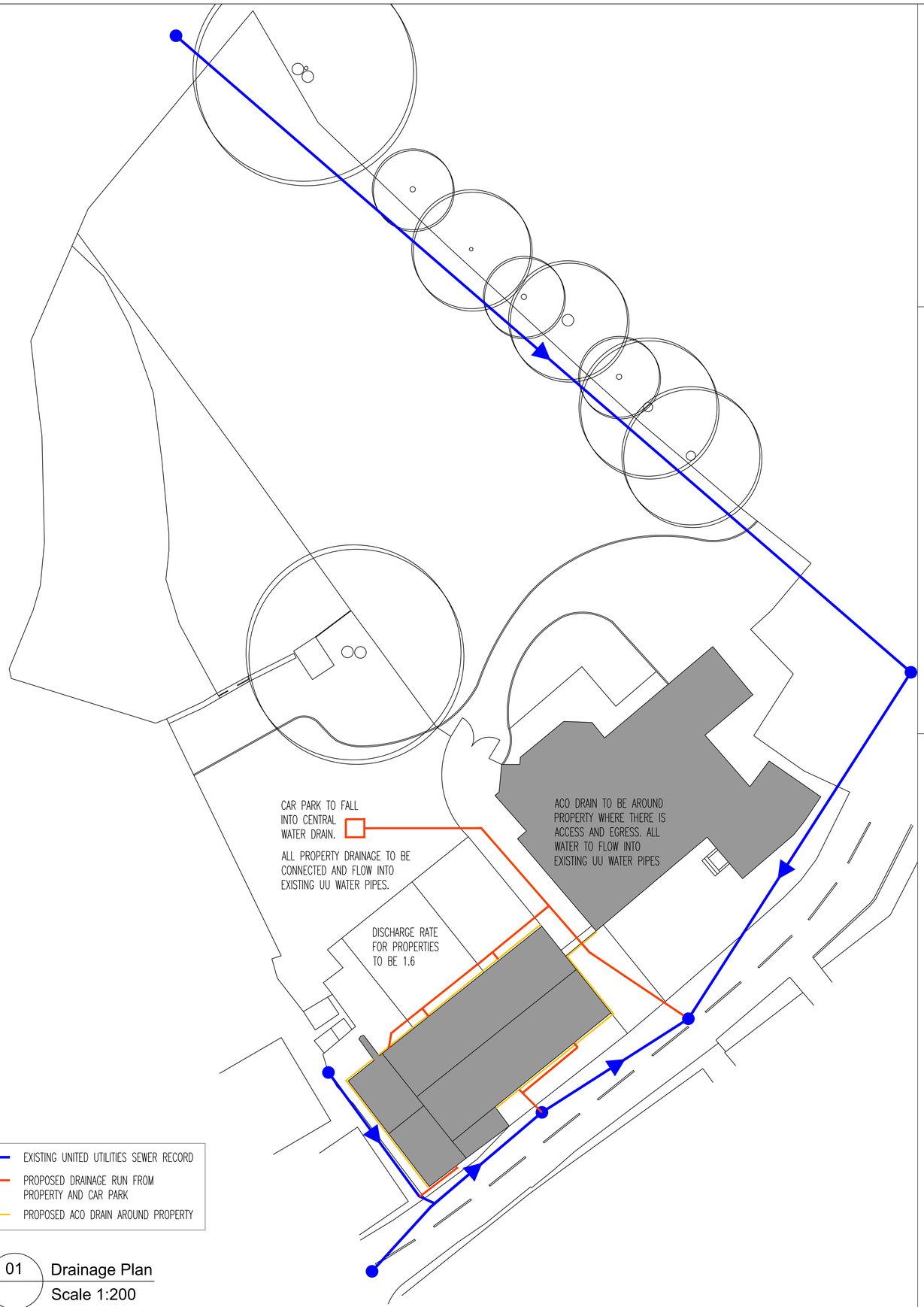

01 Drainage Plan
Scale 1:200

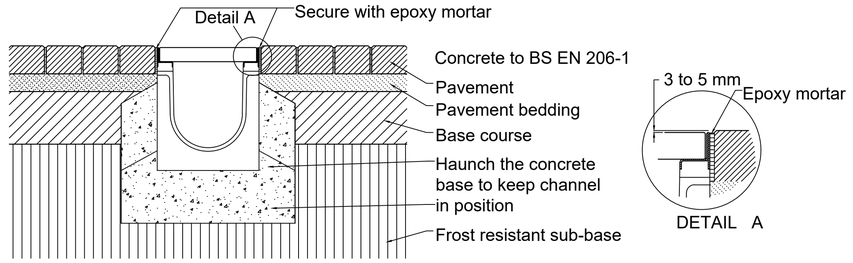

02 Aco Detail

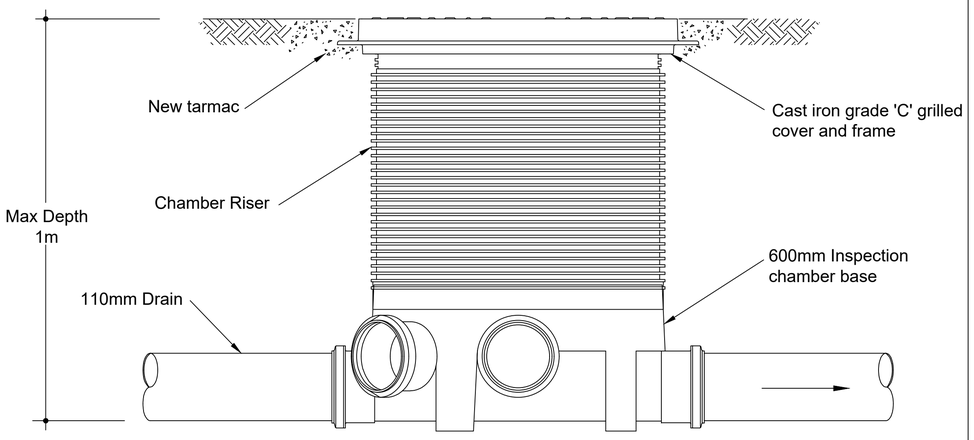

02 600mm Inspection Chamber Detail

BELOW GROUND DRAINAGE:

ALL DRAINS UNDER THE BUILDING SHALL BE SURROUNDED WITH AT LEAST 100MM OF GRANULAR MATERIAL. WHERE THE CROWN OF THE PIPE IS WITHIN 300MM OF THE UNDERSIDE OF THE FLOOR SLAB THE PIPE SHALL BE PROTECTED BY REINFORCED CONCRETE COVER SLABS WITH FLEXIBLE FILLER AND AT LEAST 75MM OF GRANULAR MATERIAL BETWEEN THE TOP OF THE PIPE AND THE UNDERSIDE OF THE FLEXIBLE FILLER BELOW THE SLABS.
WHERE DRAINS PASS THROUGH EXTERNAL WALLS THEY ARE TO BE PROTECTED WITH A PRE-STRESSED CONCRETE LINTEL OVER WITH MINIMUM 150MM END BEARINGS AND 50MM CLEARANCE ALL AROUND THE PIPE. THE OPENING IS TO BE MASKED WITH RIGID SHEET MATERIAL ON BOTH SIDES TO PREVENT THE INGRESS OF VERMIN AND FILL MATERIAL. THE VOID AROUND THE PIPE WHERE IT PASSES THROUGH THE CONSTRUCTION SHALL BE FILLED WITH A COMPRESSIBLE SEALANT TO PREVENT ENTRY OF GAS. THE LENGTH OF PIPE PASSING THROUGH THE WALL IS TO BE KEPT AS SHORT AS POSSIBLE AND 600MM LONG MAXIMUM ROCKER PIPES ARE TO BE USED EITHER SIDE OF THE WALL STRUCTURE TO PROVIDE FLEXIBILITY.
ROCKER PIPE JOINTS TO BE POSITIONED MAXIMUM 150MM FROM THE FACE OF THE WALL/STRUCTURE.
ACCESS POINTS IN THE FORM OF RODDING EYES, ACCESS FITTINGS, INSPECTION CHAMBERS OR MANHOLES TO BE PROVIDED AT THE FOLLOWING POINTS:
(1) ON OR NEAR THE HEAD OF EACH DRAIN RUN
(2) AT A BEND AND AT A CHANGE IN GRADIENT.
(3) AT A CHANGE IN PIPE SIZE
(4) AT A JUNCTION UNLESS EACH RUN CAN BE CLEARED FROM AN ACCESS POINT.

450MM DIAMETER PLASTIC INSPECTION CHAMBERS SHALL BE CONSTRUCTED WITH 150MM THICK C20 CONCRETE BASE AND SURROUNDED WITH 150MM OF PEA SHINGLE FOR INVERT LEVELS OF 1000MM OR LESS.
MANHOLE AND OR INSPECTION CHAMBERS SHOULD HAVE REMOVABLE NON-VENTING COVERS TO BE EITHER DUCTILE IRON OR PRESSED STEEL DEPENDENT UPON LOCATION AND LOADING CONDITIONS.
INSPECTION CHAMBERS INSIDE BUILDINGS SHALL HAVE MECHANICALLY FIXED AIRTIGHT COVERS.
FOUL AND SURFACE WATER DRAINAGE ARE TO BE KEPT AS SEPARATE SYSTEMS WHERE SEPARATE SYSTEMS EXIST ON SITE.

ABOVE GROUND DRAINAGE:

EXISTING DRAINAGE SYSTEM SHOWN ON DRAWINGS IS ASSUMED AND IS SUBJECT TO CONFIRMATION ON SITE AT TIME OF CONSTRUCTION.
ALL FOUL AND SURFACE WATER DRAINAGE SHALL BE KEPT SEPARATE IF SEPARATE SYSTEMS EXIST ON SITE.
SURFACE WATER DRAIN RUNS TO BE 100 DIAMETER PVCU LAID AT A MINIMUN GRADIENT OF 1:60 WITH 150 MM PEA SHINGLE BED & SURROUND UNLESS ORTHERWISE SPECIFIED.
FOUL WATER DRAIN RUNS TO BE 100MM DIAMETER PVCU LAID AT A MINIMUM GRADIENT OF 1: 40 WITH 150MM PEA SHINGLE BED & SURROUND UNLESS OTHERWISE SPECIFIED.

RAINWATER GOODS: 100MM WIDE PVCU SEMI CIRCULAR SECTION GUTTERS LAID TO FALLS TO DISCHARGE INTO 65MM ROUND RAINWATER DOWNPIPES.

Notes Copyright in all documents and drawings prepared by the architectural designer and any works executed from these documents and drawings shall, unless otherwise agreed, remain the property of the designer and must not be reproduced by, lent or disclosed to, a third party without the written consent of Zach Thorp.

Do not scale off this drawing

All dimensions are to be checked on site and any discrepancies to be referred to the designer before proceeding. All levels to be checked on site All discrepancies between information shown on the drawings and the information in the specification to be referred to the designer prior to proceeding. All component sizes and references to be checked before ordering

Position of existing drain runs to be confirmed prior to proceeding and drains checked as necessary.

All relevant boundary positions are to be checked prior to proceeding

Building regulation drawings can be used for building estimates, however for an accurate quote builders must attend site as these drawings do not account for all aspects of the building works.

Rev	Description	Date	By	Chk

Status: Purpose for Issue
Survey ☐ Tender ☐
Construction ☒ As Built ☐

Client
Tri Star Developments ltd

Contract
Conversion of barn on Talbot Street, Chipping into 3 private properties.

Drawing
Proposed Drainage Details

Drawing No. ZT23-196-21 | Revision /
Scales 1:20 | Date Aug '23
Drawn ZTT | Checked

THORP DESIGN SERVICES LTD.