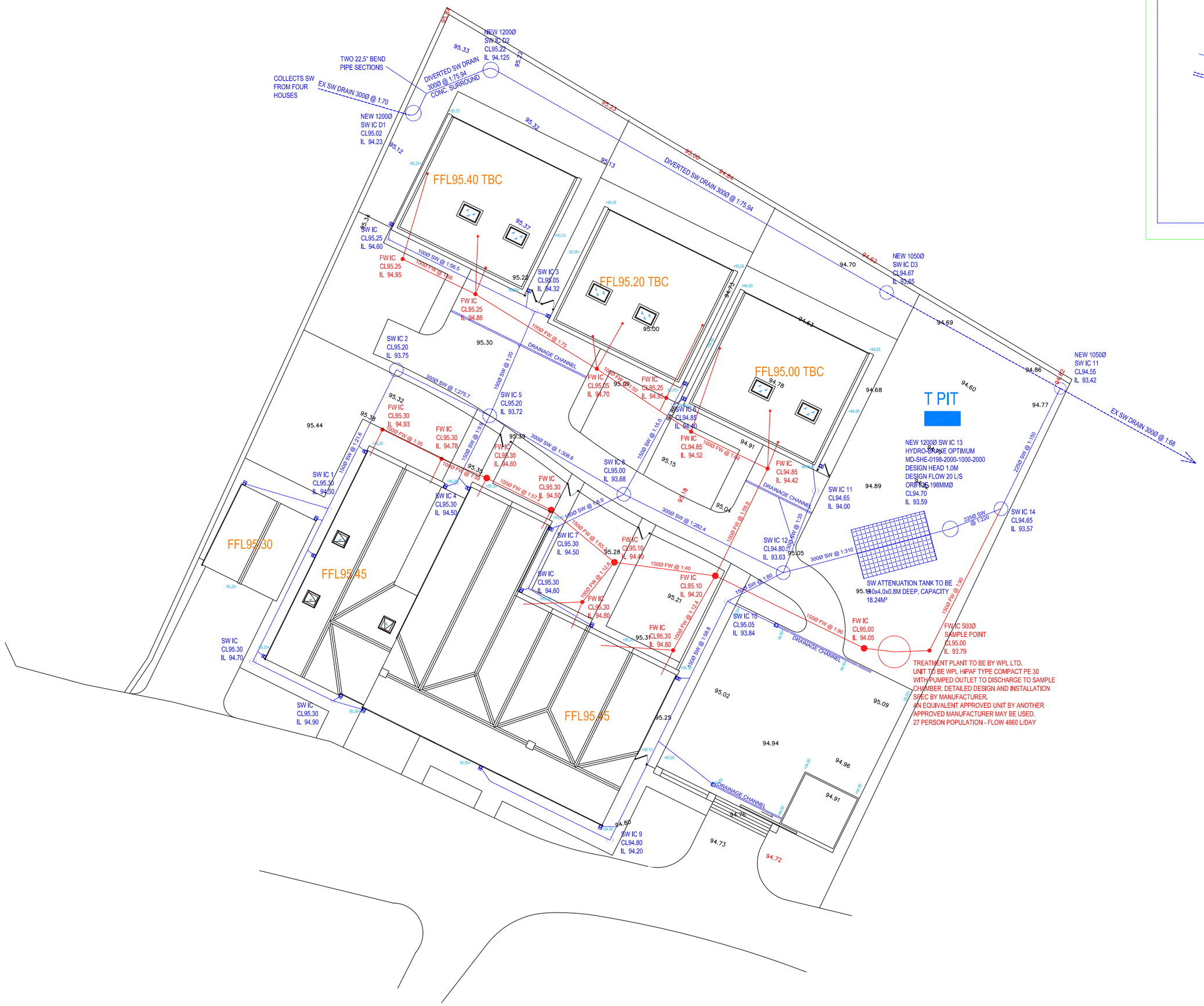

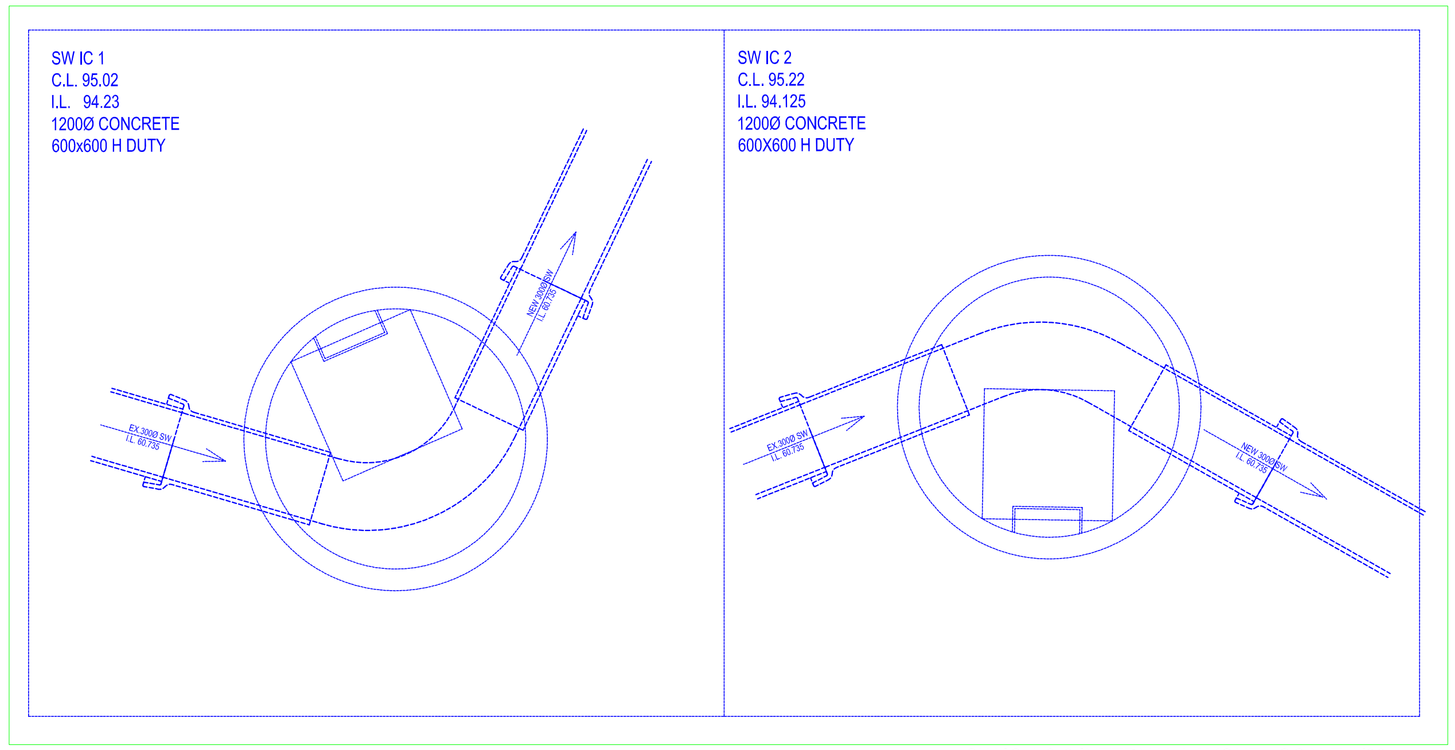

SW IC 1 & 2 INTERNAL LAYOUT - SCALE 1/20

Rev	Details	By	Date
D	CHAMBERS RENUMBERED	RGH	11.07.2024
C	PLOT LAYOUT REVISED	RGH	10.04.2024
B	FOUL AND SURFACE WATER SCRIPT UPDATED	RGH	01.03.2024
A	DIVERSION CHAMBERS REVISED AND LAYOUTS ADDED	RGH	05.06.2023

Hamilton Technical Services
Civil & Environmental Engineering Consultants
1 Chiltern Ave.,
Euxton, Chorley,
Lancs., PR7 6NU
Tel:- 01257 278938
Mob:- 07977 680913
email:- hamiltontecsers@gmail.com

Client: HOMELIFE DEVELOPMENTS LTD

Project: RESIDENTIAL RE-DEVELOPMENT THE DOG & PARTRIDGE CHIPPING, PRESTON

Title: PROPOSED DRAINAGE LAYOUT

Drg.No. C - 1050 - 05 | Rev.n D | Date 19.04.2023 | Drawn RGH | Scale 1/200@A1 | Check RGH