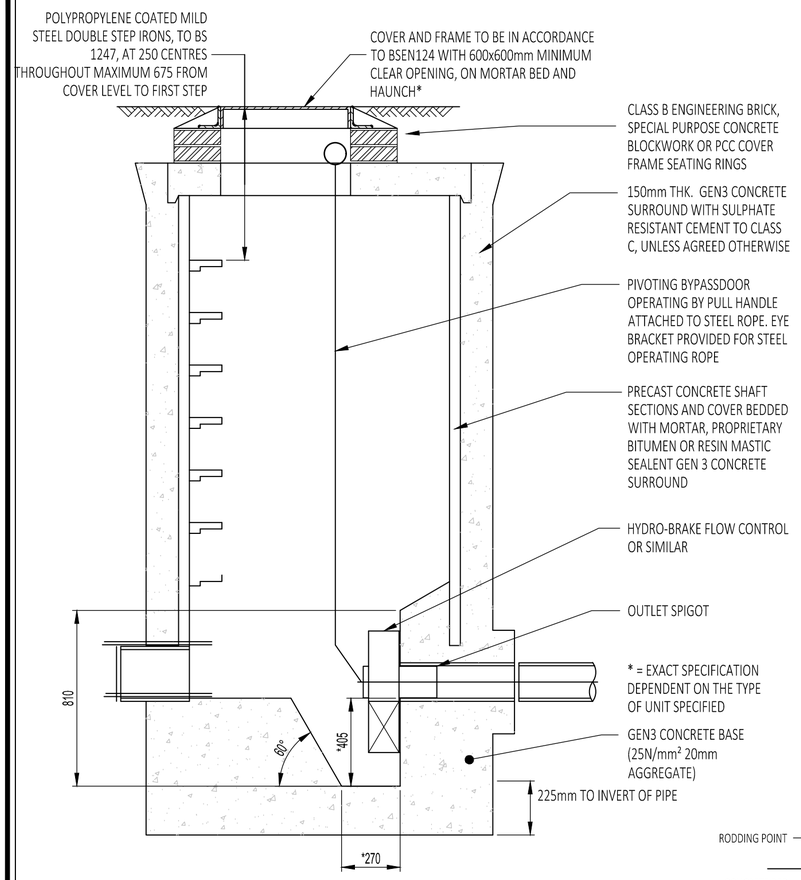

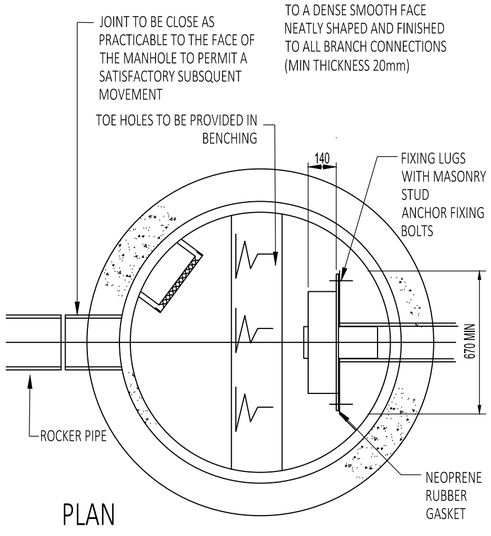

PLAN

TYPICAL FLOW CONTROL MANHOLE - 1:20

EXTRACT FROM TABLE A2 WIS 4-08-02

PROCESSED GRANULAR BEDDING AND SIDEFILL MATERIALS FOR PIPES

PIPE NOMINAL BORE (mm) SEE NOTE (D)	NOMINAL MAXIMUM PARTICLE SIZE (mm)	MATERIALS SPECIFIED IN BRITISH STANDARDS SEE NOTE (A)
100	10	10mm NOMINAL SINGLE-SIZE
OVER 100 TO 150	15	10 OR 14mm NOMINAL SINGLE-SIZE OR 14mm TO 5mm GRADED
OVER 150 TO 300	20	10-14mm OR 20mm NOMINAL SINGLE-SIZE OR 14mm TO 5mm GRADED 20mm TO 5mm GRADED
OVER 300 TO 500	20	14 OR 20mm NOMINAL SINGLE-SIZE OR 14mm TO 5mm GRADED OR 20mm TO 5mm GRADED
OVER 500	40	14 OR 20mm OR 40mm NOMINAL SINGLE-SIZE OR 14mm TO 5mm GRADED OR 20mm TO 5mm GRADED OR 40mm TO 5mm GRADED

NOTES:

(A) PROCESSED GRANULAR MATERIALS TO INCLUDE AGGREGATES TO BS 882, AIR-COOLED BLAST FURNACE SLAG TO BS1047 AND LIGHTWEIGHT AGGREGATES TO BS 3797

(C) FOR THE PURPOSE OF THIS TABLE, PE PIPE OF 630mm O.D. CAN BE REGARDED AS HAVING NOMINAL BORES OF OVER 550mm, IRRESPECTIVE OF WALL THICKNESS.

(D) NOMINAL BORE IS USED IN PREFERENCE TO DN BECAUSE OF THE DIFFERENT NOMINAL SIZE CLASSIFICATIONS FOR FLEXIBLE PIPES

MINIMUM RECOMMENDED TRENCH WIDTHS FOR STRUCTURED WALL PIPES IN POOR GROUND CONDITIONS.

NATIVE SOIL MODULUS BETWEEN 3 AND 4 MPA
TYPICAL SOIL CLASSIFICATIONS : VERY LOOSE GRAVEL, LOOSE SAND, MEDIUM DENSE CLAYEY SILTY SAND, FIRM CLAY

NOMINAL PIPE DIAMETER (mm)	150	225	300	375	450	525	600	750	900
MINIMUM TRENCH WIDTH (mm)*	450	525	600	750	900	1050	1200	1500	1800

* A VERTICAL TRENCH FACE HAS BEEN ASSUMED TO ALLOW A MODULUS OF 7 MPA TO BE ACHIEVED FOR THE PIPE BEDDING AND SIDEFILL MATERIAL.

NOTE. WHERE THE NATIVE SOIL MODULUS IS BELOW 3MPA OR THE DEPTH OF COVER EXCEEDS 6 METRES GUIDANCE SHOULD BE SOUGHT FROM THE PIPE MANUFACTURER REGARDING STRUCTURAL DESIGN AND INSTALLATION DETAILS.

OTHER ASSUMED VALUES
DEPTH OF COVER = 6.00 METRES (MINIMUM)
TRAFFIC LOADING = MAIN ROAD
PIPE STIFFNESS = SNB

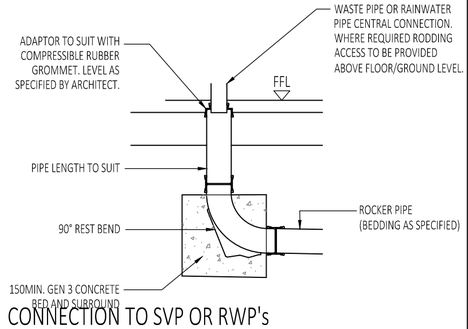

CONNECTION TO SVP OR RWP's

90° REST BEND - DROP LESS THAN 1.4m

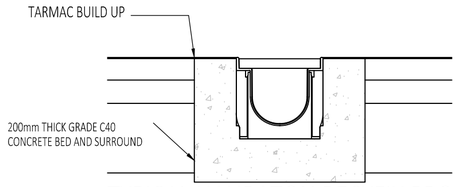

TYPICAL HAURATON RECYFIX PRO DRAINAGE CHANNELS 1:20mm

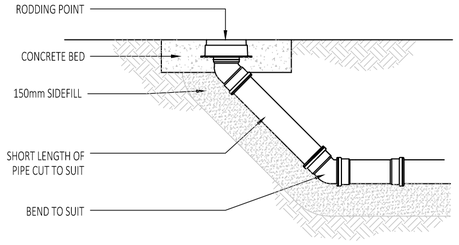

RODDING EYE DETAIL

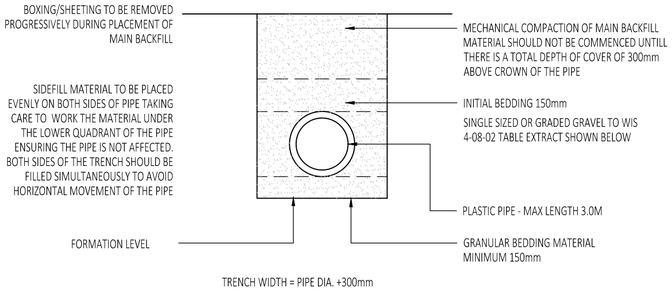

CLASS `S' GRANULAR BEDDING DETAIL

PLASTIC CHAMBERS AND RINGS SHALL COMPLY WITH BD EN 13598-1 AND BS EN 13598-2 OR HAVE EQUIVALENT INDEPENDENT APPROVAL

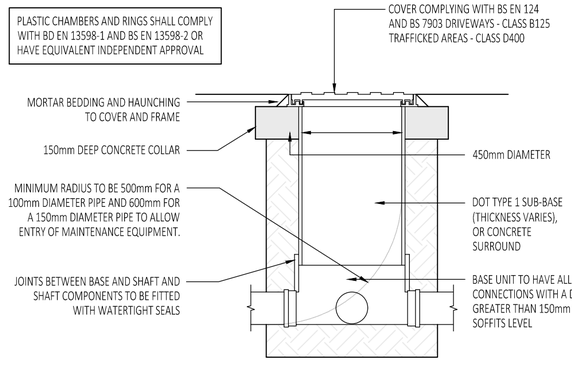

TYPICAL 450mm DIAMETER PPIC DETAIL - SITED IN DRIVEWAYS / TRAFFICKED AREAS

FOR USE WITH PIPES UP TO 150mm DIAMETER.
MAXIMUM INSTALLATION DEPTH 3.0m
NON-ENTRY FOR DEPTHS GREATER THAN 1.20m (REDUCED COVER OPENING TO 350Ø)
STANDARD COVER OPENING OF 430Ø FOR DEPTHS LESS THAN 1.20m

PLASTIC CHAMBERS AND RINGS SHALL COMPLY WITH BD EN 13598-1 AND BS EN 13598-2 OR HAVE EQUIVALENT INDEPENDENT APPROVAL

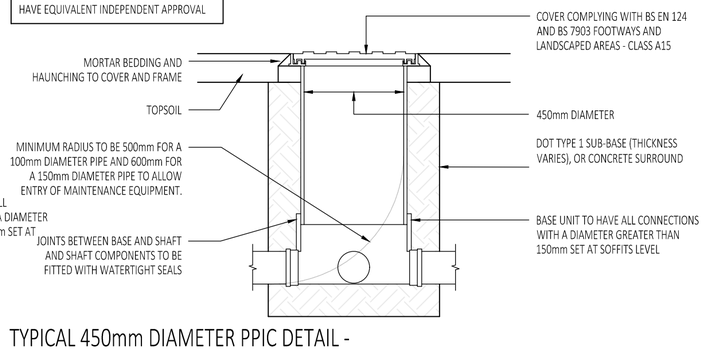

TYPICAL 450mm DIAMETER PPIC DETAIL - SITED IN DOMESTIC GARDENS

FOR USE WITH PIPES UP TO 150mm DIAMETER.
MAXIMUM INSTALLATION DEPTH 3.0m
NON-ENTRY FOR DEPTHS GREATER THAN 1.20m (REDUCED COVER OPENING TO 350Ø)
STANDARD COVER OPENING OF 430Ø FOR DEPTHS LESS THAN 1.20m

NOTES:

1. COPYRIGHT IN THIS DOCUMENT BELONGS TO PAUL WAITE ASSOCIATES LIMITED & ALL RIGHTS IN IT ARE RESERVED BY THE OWNER.
2. NO PART OF THIS DRAWING MAY BE COPIED, TRANSFERRED, OR MADE AVAILABLE TO USERS OTHER THAN THE ORIGINAL RECIPIENT, INCLUDING ELECTRONICALLY, WITHOUT PRIOR PERMISSION FROM PAUL WAITE ASSOCIATES LIMITED.
3. THIS DRAWING IS TO BE READ IN CONJUNCTION WITH ALL RELEVANT ARCHITECTS & ENGINEERS DRAWINGS & SPECIFICATIONS.
4. ALL DIMENSIONS ARE SHOWN IN MILLIMETRES.
5. NO DIMENSIONS TO BE SCALED FROM THIS DRAWING.
6. ONLY PDF/HARD COPIES OF DRAWINGS SHOULD BE REFERRED TO FOR CONSTRUCTION USE, THE USE OF AUTOCAD DRAWINGS/DWG'S IS UNDERTAKEN ENTIRELY AT THE DEVELOPERS RISK AND ALL DIMENSIONS AND SETTING OUT MUST BE CHECKED IN CONJUNCTION WITH THE ARCHITECT AND ENGINEERS CONSTRUCTION DRAWINGS. ALL DRAWINGS SHOULD BE CONFIRMED AS LATEST ISSUE ON THE DOCUMENT ISSUE SHEET PRIOR TO COMMENCEMENT OF WORKS AND SHOULD BE USED ONLY FOR THEIR DEFINED DRAWING STATUS. ANY DISCREPANCIES BETWEEN THE ARCHITECT AND ENGINEERS DRAWINGS ARE TO BE IMMEDIATELY NOTIFIED TO ALL PARTIES.

Rev	Date	Remarks	Drawn	Chk'd
P02	04/09/24	ADDITIONAL INSPECTION CHAMBER DETAIL ADDED.	IB	LS
P01	14/06/24	FIRST ISSUE.	IB	LS

PWA / GROUP

CIVIL
STRUCTURAL
GEO-ENVIRONMENTAL

SUMMIT HOUSE, RIPARIAN WAY,
THE CROSSINGS, CROSSHILLS,
KEIGHLEY, BD20 7BW

01535 633350
info@pwagroup.co.uk
www.pwagroup.co.uk

Client
ZARA MOON ARCHITECTS

Project
SPRINGWOOD
B6243
CLITHEROE

Title
TYPICAL DRAINAGE DETAILS

Size	Scale	Designed	Checked	Date
A2	1:20mm	IB	LS	JUN 2

Drawing Status
PRELIMINARY

Job Number	Originator	Zone	Level	Type	Role	Drawing No.	Rev
23269	PWA	00	XX	DR	C	1001	P02