ONLINE VERSION

Diagram 17 **Flue outlet positions for solid fuel appliances**

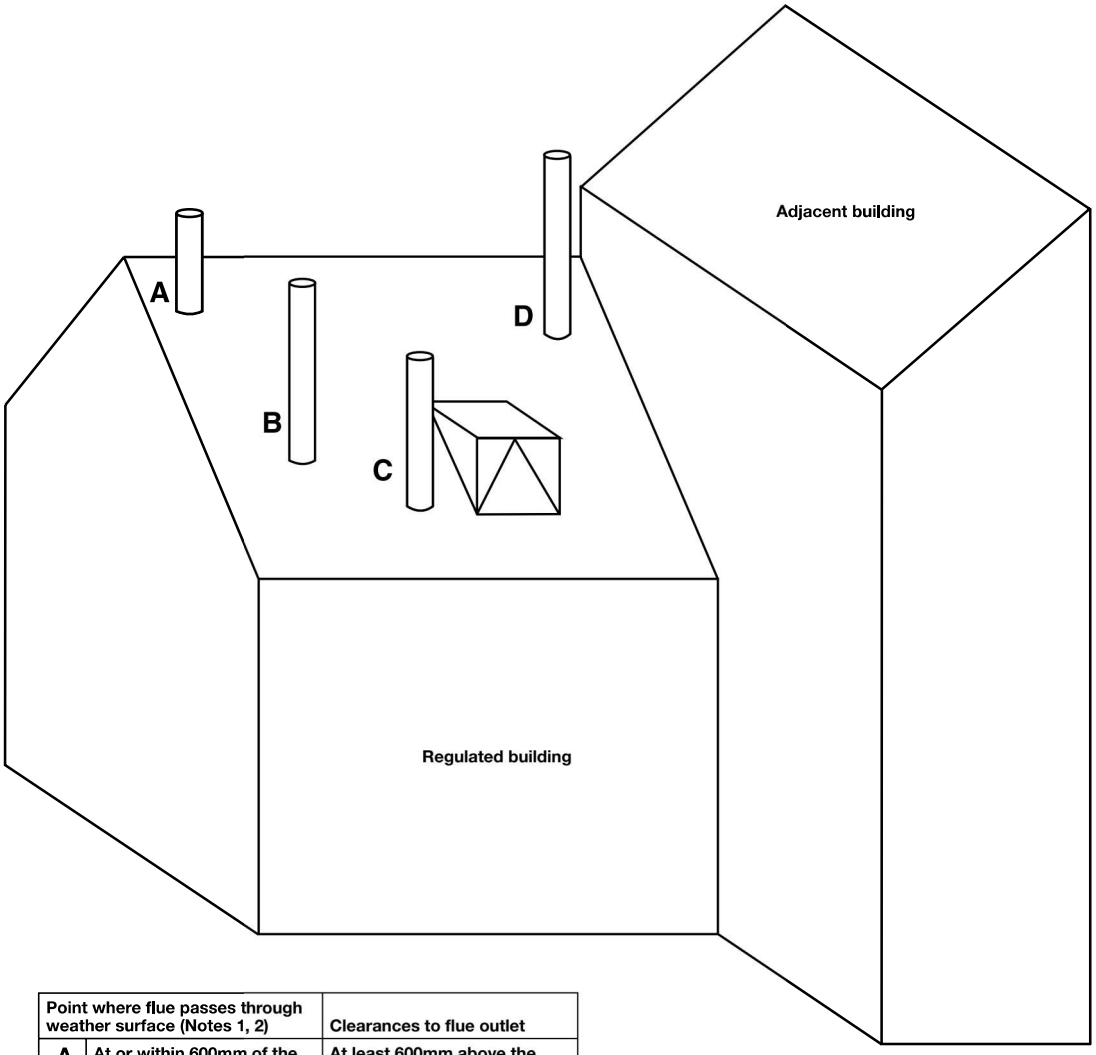

Point where flue passes through weather surface (Notes 1, 2)		Clearances to flue outlet
A	At or within 600mm of the ridge	At least 600mm above the ridge
B	Elsewhere on a roof (whether pitched or flat)	At least 2300mm horizontally from the nearest point on the weather surface and: a) at least 1000mm above the highest point of intersection of the chimney and the weather surface; or b) at least as high as the ridge.
C	Below (on a pitched roof) or within 2300mm horizontally to an openable rooflight, dormer window or other opening (Note 3)	At least 1000mm above the top of the opening.
D	Within 2300mm of an adjoining or adjacent building, whether or not beyond the boundary (Note 3)	At least 600mm above any part of the adjacent building within 2300mm.

Notes

1) The weather surface is the building external surface, such as its roof, tiles or external walls.

2) A flat roof has a pitch less than 10°.

3) The clearances given for A or B, as appropriate, will also apply.

4) A vertical flue fixed to an outside wall should be treated as equivalent to an inside flue emerging at the nearest edge of the roof.

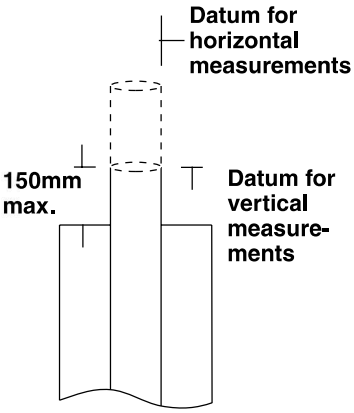

The datum for vertical measurements is the point of discharge of the flue, or 150mm above the insulation, whichever is the lower

ONLINE VERSION