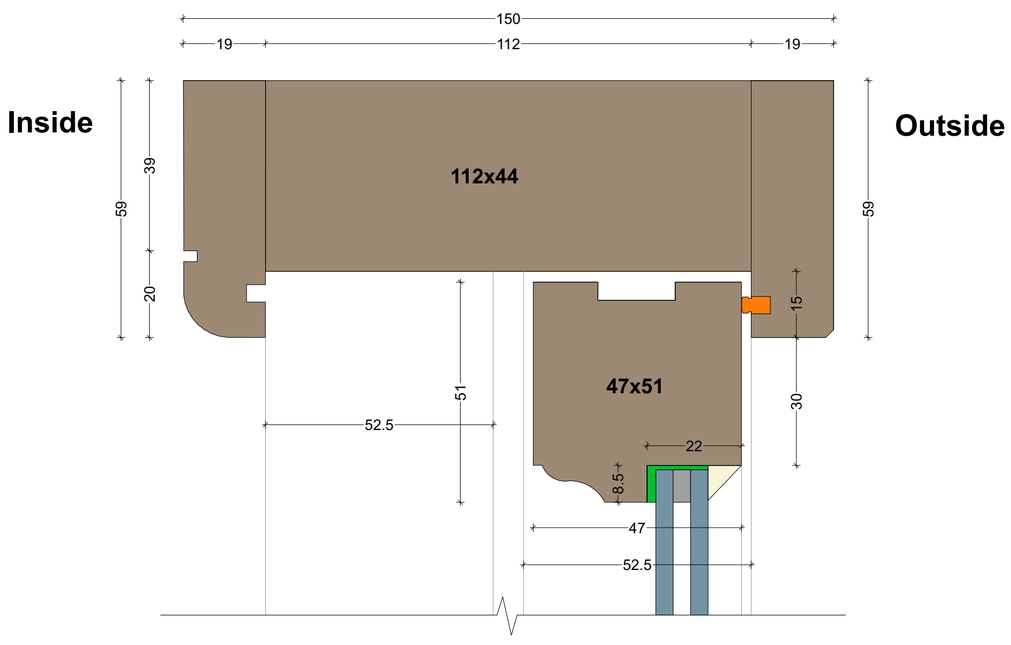

TYPICAL SASH HEAD DETAIL

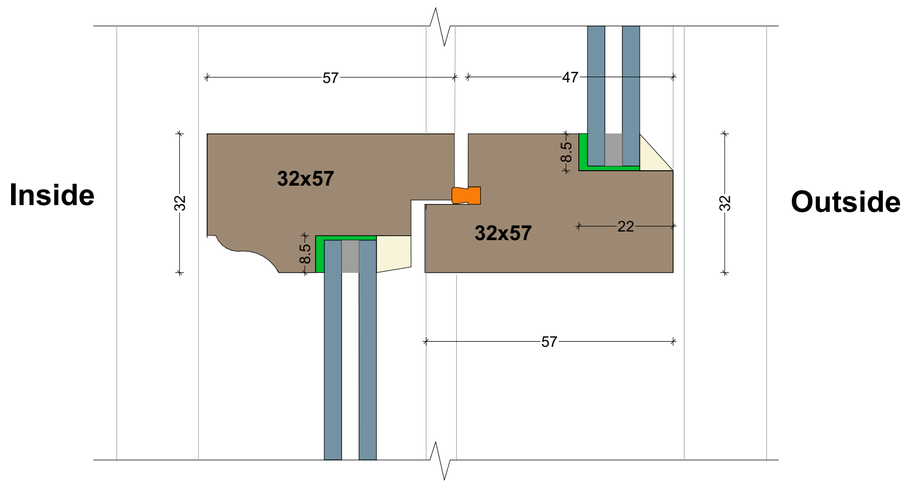

TYPICAL MEETING RAIL DETAIL

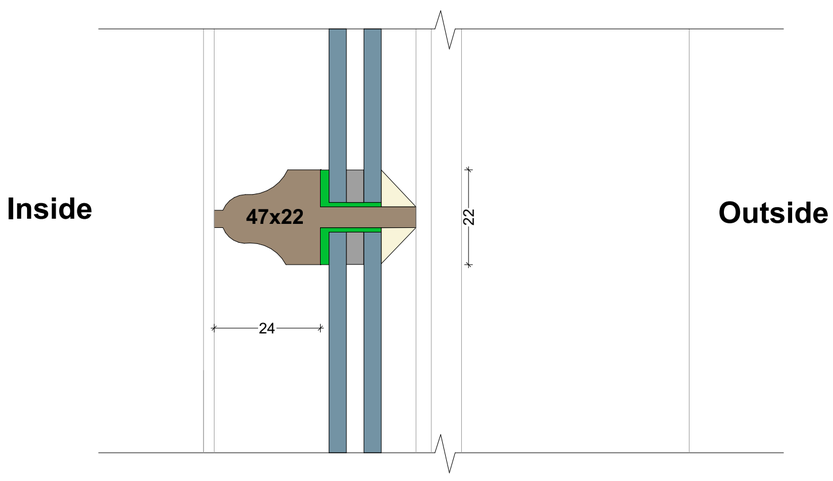

TYPICAL GLAZING BAR DETAIL

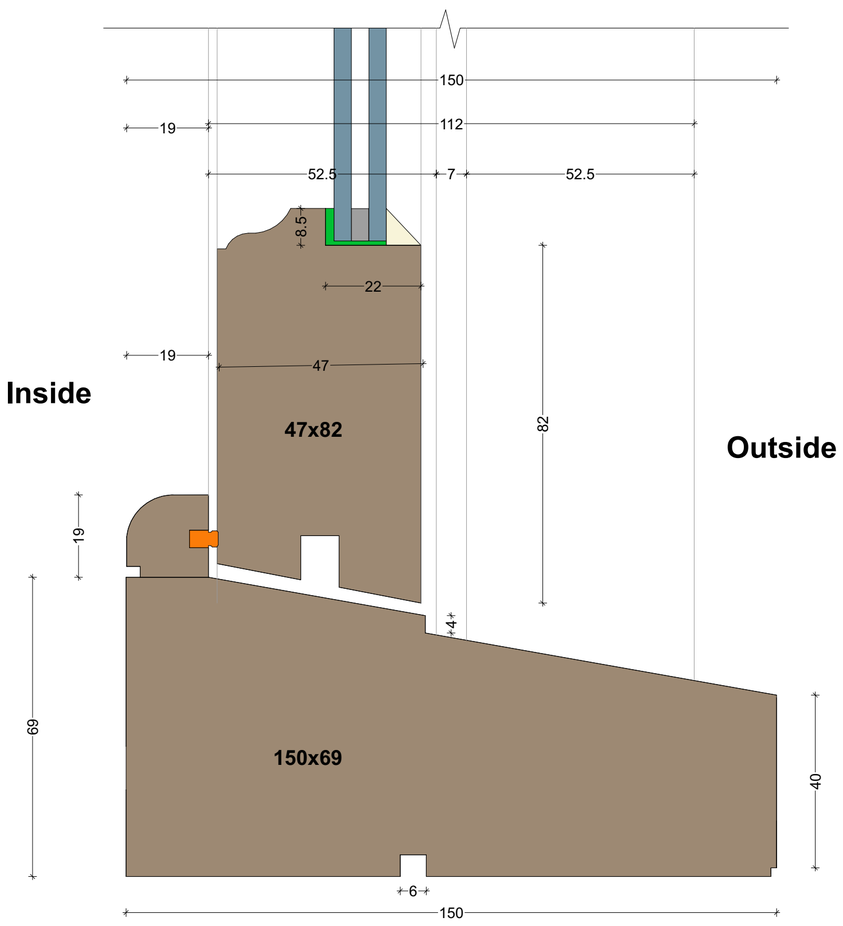

TYPICAL SASH SILL DETAIL

Frame to seal tolerance to be verified by window manufacturer to ensure suitable seal

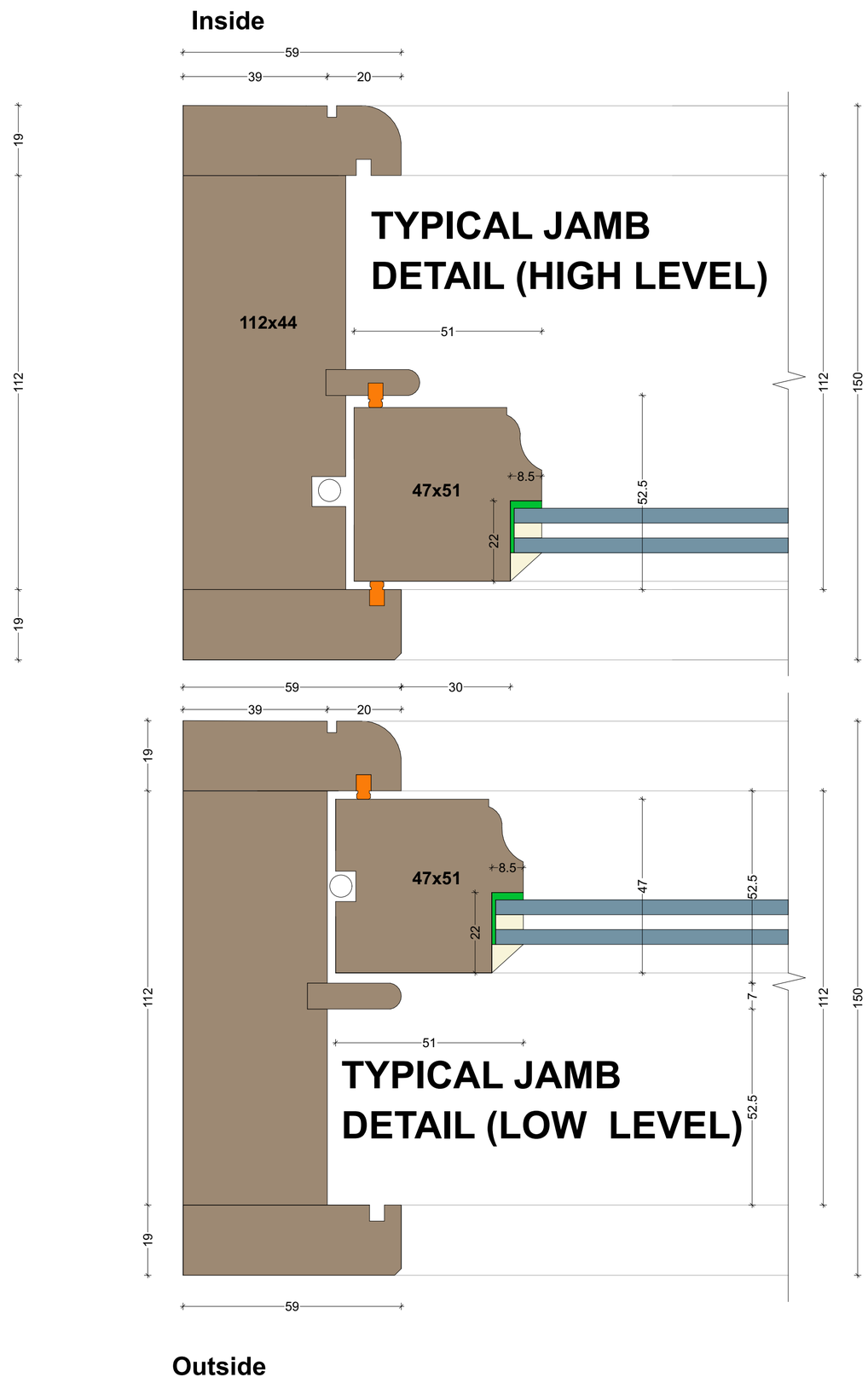

TYPICAL JAMB DETAIL (HIGH LEVEL)

TYPICAL JAMB DETAIL (LOW LEVEL)

SPIRAL SPRUNG SLIDING SASH WINDOW DETAIL

Rev.	Date	Description	Drwn.

This drawing is copyright of Halsall Lloyd Partnership & must not be reproduced unless specifically agreed in writing.

Scale

North

Offices at : Liverpool & Nottingham
Halsall Lloyd Partnership
Address
98 Duke Street
Post Code
L1 5AG
Issuing Office
Liverpool
Tel
0151 708 8944
Website
www.hlpdesign.com

Drawing Title
SPIRAL SPRUNG SLIDING SASH WINDOW DETAIL
Project
Number 1-4, Almhouses, Stydd lane, Ribchester, PR3 3YQ
Client
Your Housing Group
Scales @ A1
1:1
First Issue Date
31/05/2024
Drawn
BMc
Check
GL
Job Number / Dwg. No. / Revision
3184_D_08_V01
RIBA Stage . Drawing Status
[2] - PRELIMINARY

Halsall Lloyd Partnership
ARCHITECTS & DESIGNERS