Site Location Plan

1:1250 Scale

Job Ref: **7341-E00**
Proposed Extension and Alterations
The Warren,
Warren Fold
BB7 9QH

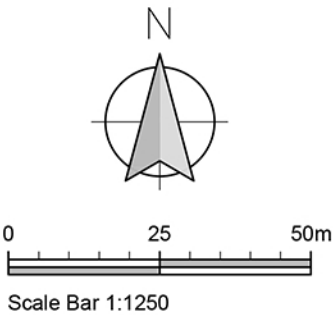

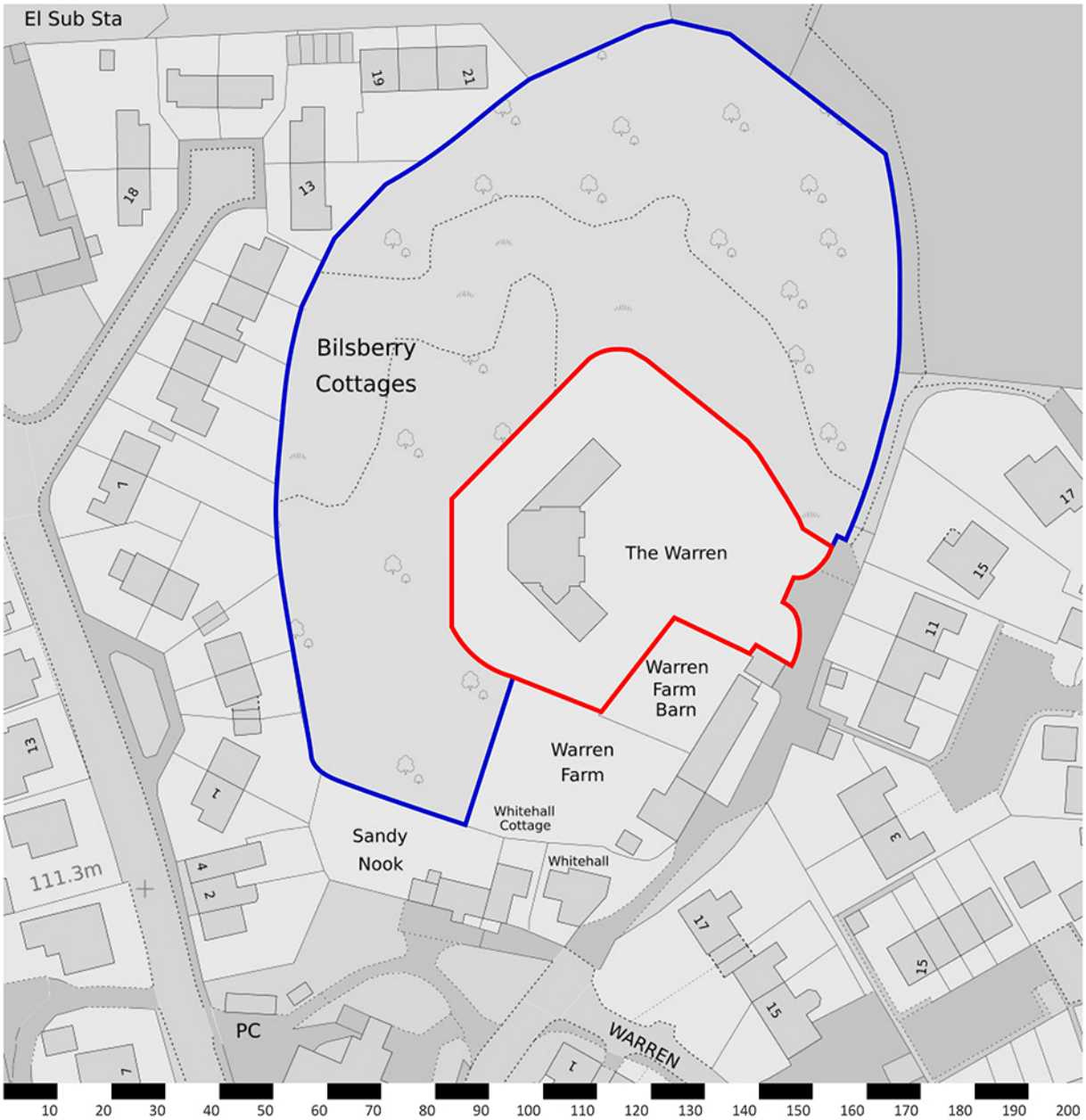

Scale: 1:1250 | Area: 4ha | Paper size: A4

Mapping contents © Crown copyright and database rights 2025 Ordnance Survey®
AC0000824534