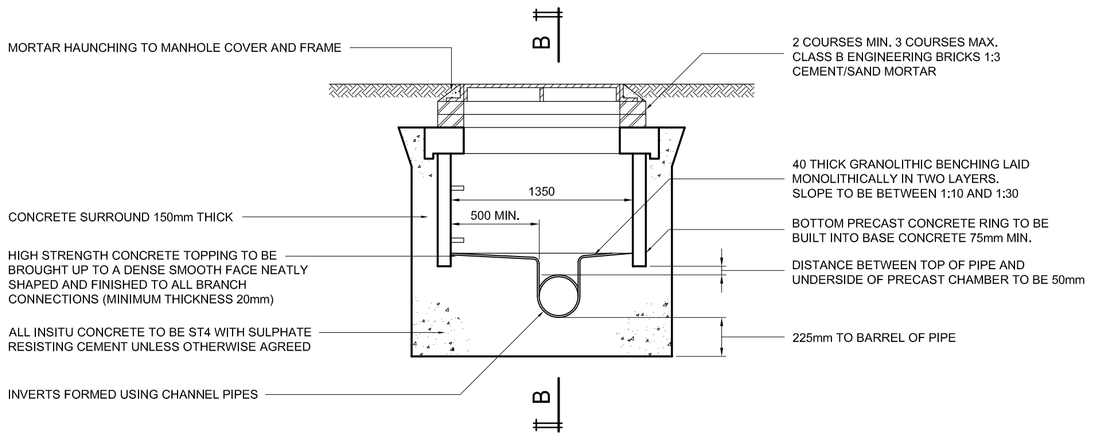


TYPICAL MANHOLE DETAIL DEPTH FROM COVER LEVEL TO SOFFIT OF PIPE 1.0m TO 1.5m

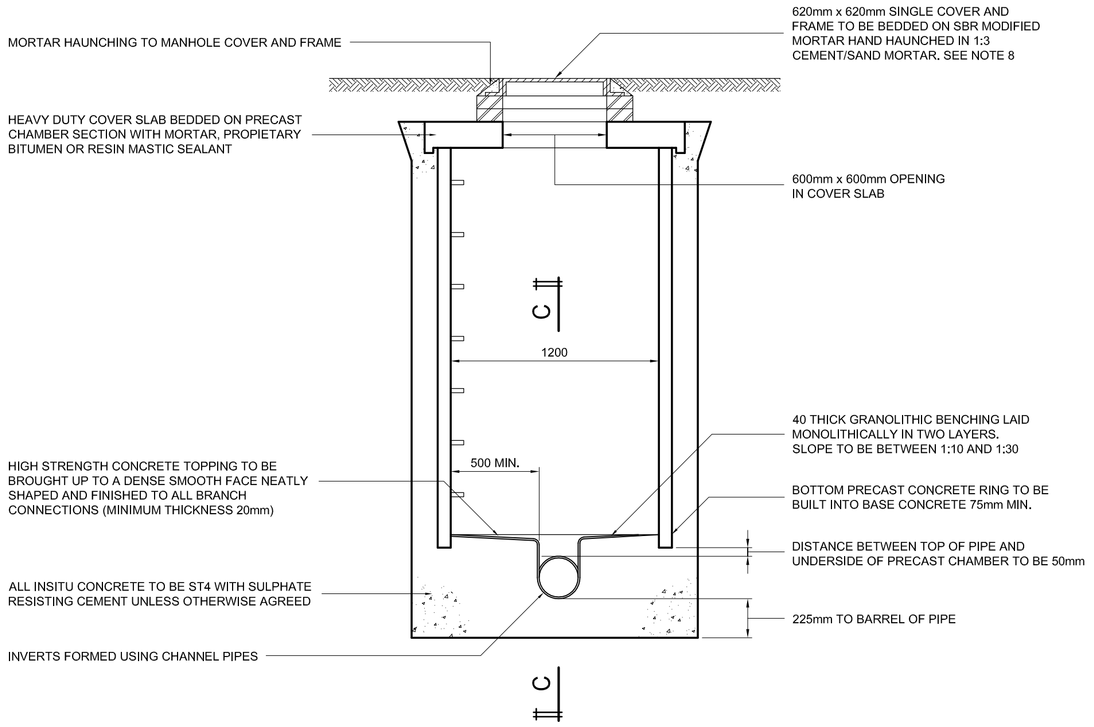


TYPICAL MANHOLE DETAIL DEPTH FROM COVER LEVEL TO SOFFIT OF PIPE 1.5m TO 3.0m

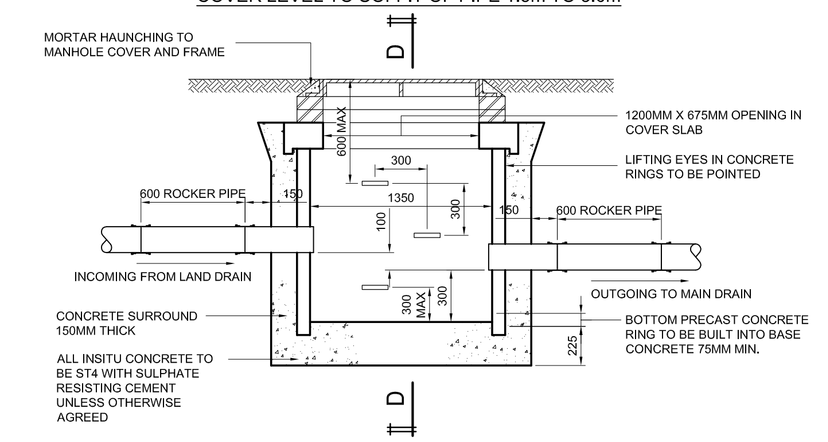


TYPICAL SILT PIT DETAIL

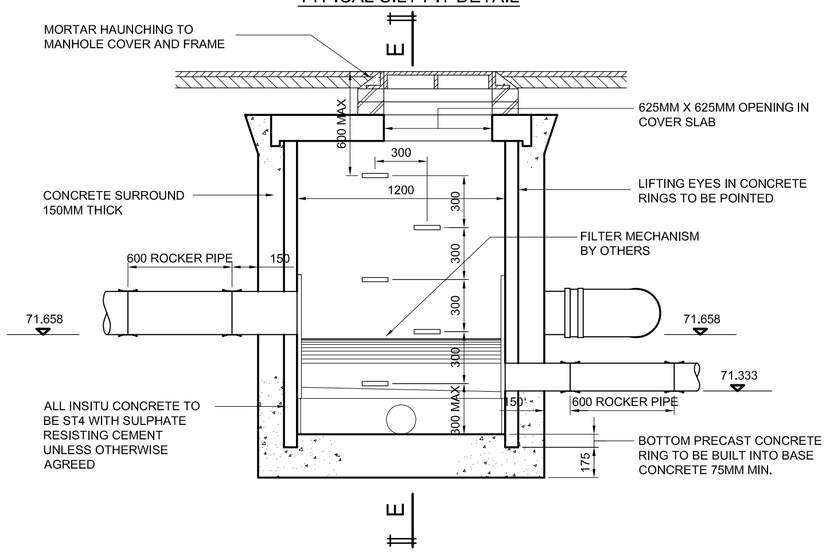


LEAF AND TWIG FILTER CHAMBER

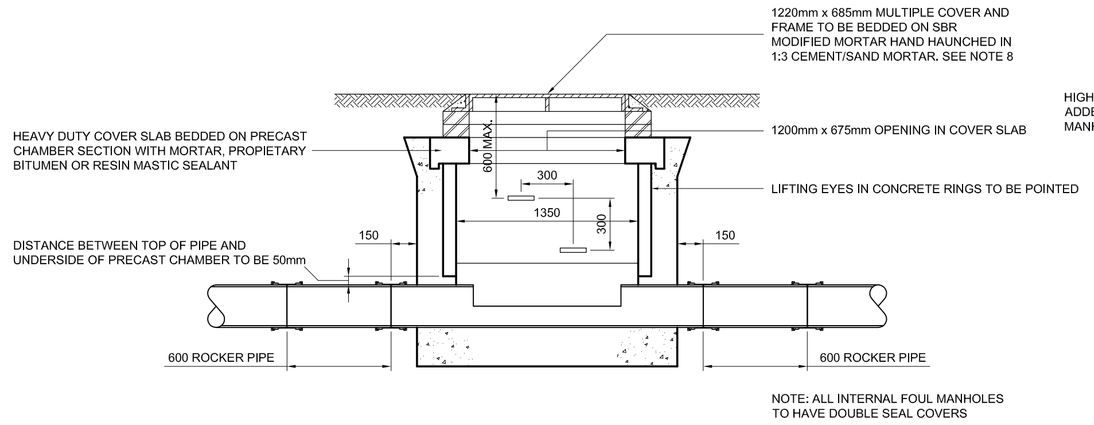


SECTION B-B

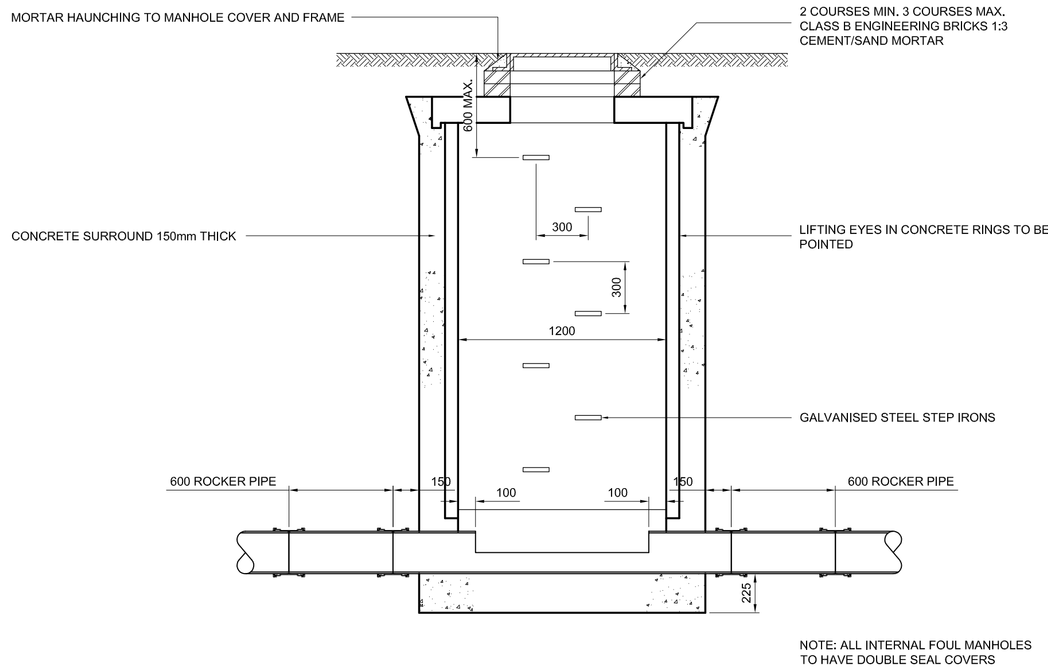


SECTION C-C

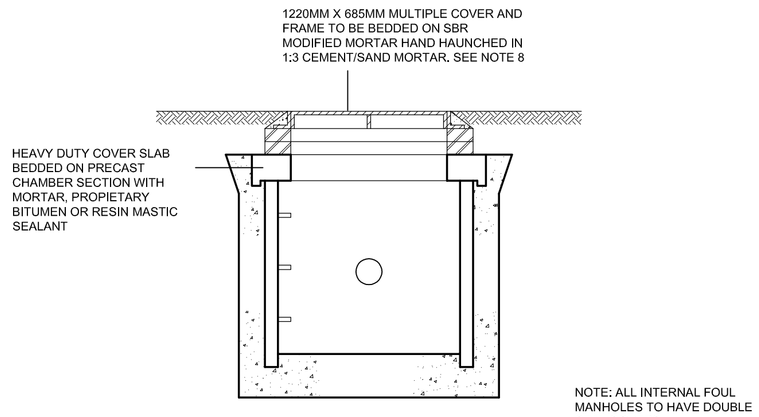


SECTION D-D

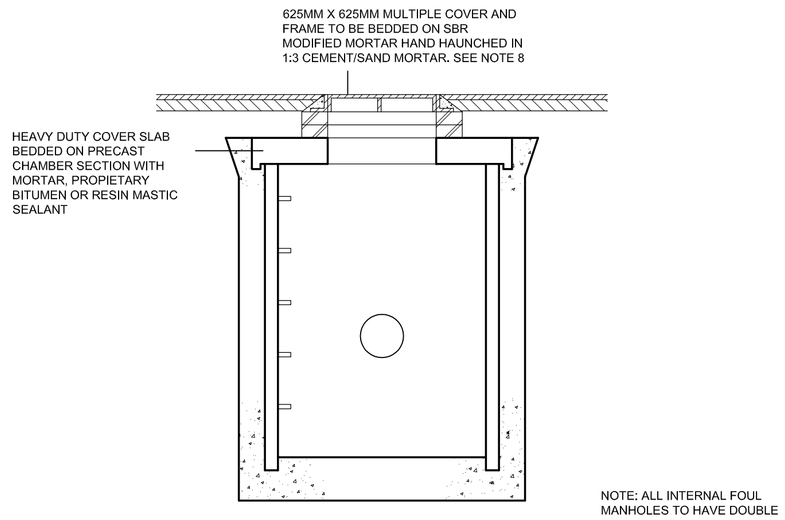


SECTION E-E

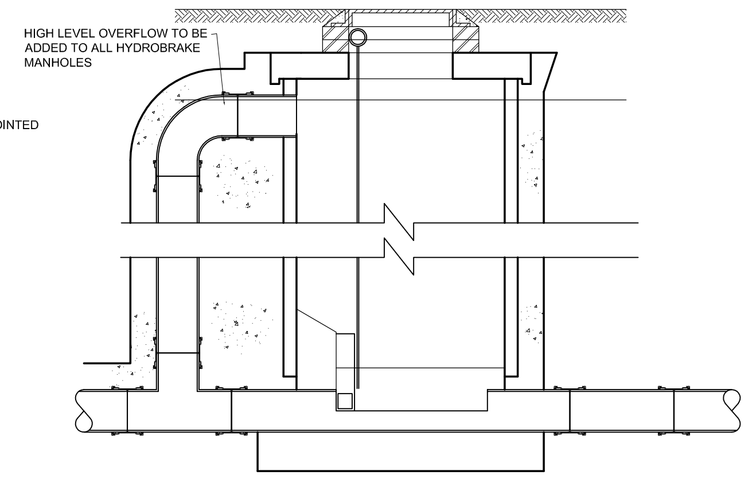


HYDROBRAKE MANHOLE

## Notes

1. This Drawing is to be read in conjunction with all relevant TRP, Architects, Service Engineers and Subcontractor drawings.
2. Review all drawings and report any discrepancies to TRP Consulting prior to commencement.
3. Do not scale from this drawing. All dimensions and levels including any abutment to existing structures to be checked on site prior to commencement.
4. Work from figured dimensions only.
5. No deviation from details shown on this drawing is allowed without TRP Consultings prior permission in writing.
6. All work is to be carried out in accordance with the relevant specifications issued by TRP Consulting, British Standard Codes of Practice, Statutory requirements and the Contract Documents.
7. Manhole covers shall be orientated to lie parallel/square to the highway.
8. The following classes of cover shall be used unless otherwise stated on the drawings:

   A15 - Areas which may be used by pedestrians and cyclists

   B125 - Footways, pedestrian areas and car parks

   C250 - Road gullies

   D400 - Road carriageways, hard shoulders and parking areas

   E600 - Service yard and access
9. All connections to be constructed with soffits level.
10. All below ground concrete to be sulphate resistant cement to Class 3.

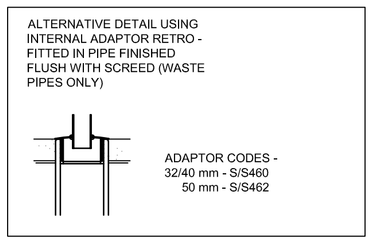


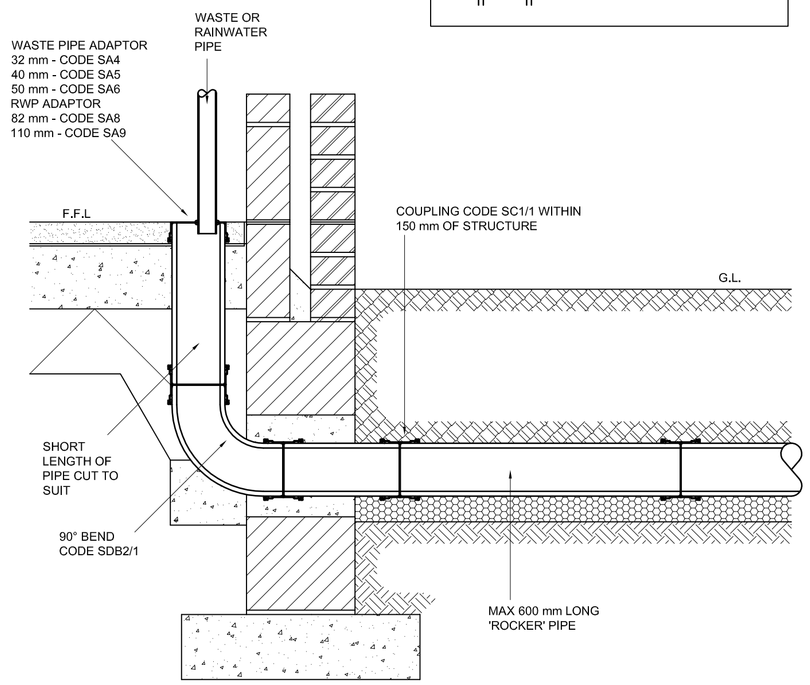


INTERNAL WASTE PIPE CONNECTION DETAIL

(SCALE 1:10)

| Rev | Description | Date / By |
|---|---|---|
| S1 | ISSUE FOR INFORMATION | 11.08.14 WC |

Project
BAE SAMLESBURY
ENTERPRISE ZONE

Client
WILSON MASON

Drawing Title
DRAINAGE DETAILS
SHEET 2

TRP Consulting
The Landmark
21 Back Turner Street
Manchester
M4 1FR

Tel 0161 839 9113
Fax 0161 839 9114
Email manchester@trpconsult.co.uk

| Drawn By | Date | Scale | Checked |
|---|---|---|---|
| SB | 21.10.11 | As Noted | TR |

| Project No. | Drawing No. | Revision |
|---|---|---|
| 6712 | D502 | S1 |

**REVISION STATUS**

S - Information issued for feasibility, scheme or tender purposes only.

C - Information issued for Construction

**Note - Only C Revision Drawings to be used for Construction.**

A1