Environmental

Certified up to 95% efficient to European Performance Standards

Klargester BioDisc® BA-BD

High Performance Package Sewage Treatment Plants for Residential Applications

Sustainable, Reliable, Affordable

Kingspan®

Klargester BioDisc® BA-BD

For domestic dwellings without access to mains drainage, the Klargester BioDisc® provides a reliable, efficient and environmentally safe solution to your sewage disposal needs.

It is ideal for locations where discharge is to sub-surface irrigation, or to a suitable watercourse where approved by the Regulator, and where a septic tank will not meet the required standards.

Certificated to European Standard EN-12566

In 2005, the Klargester BioDisc® underwent 40 weeks of stringent testing to assess its treatment efficiency to comply with the European Standard for small treatment plants.

After delivering exceptionally high levels of pollution removal (95%) under varying loads and conditions, the Klargester BioDisc® was awarded its Performance Certificate.

Only products that hold an EN-12566 certificate are approved for an exemption from a permit to discharge under the new EPP2 environmental legislation.

The test report also highlighted:

- Klargester BioDisc® operates without noise or odour
- Maintenance requirements are low with good access
- No technical or mechanical faults
- Low power consumption at 1.3kw/d - approx 10-14 pence per day*
- Low sludge build up and large storage capacity

Designed for Quality, Reliability and Peace of Mind

Klargester has pioneered the development of packaged treatment plant with many thousands of successful installations worldwide. The Klargester BioDisc® is robustly constructed from corrosion free materials, manufactured and performance tested in accordance with BS EN-12566 and has been awarded Irish Board of Agrément Certification (for BA, BA-X and BB sizes only). Klargester is an accredited company under ISO 9001:2000 quality management systems. Klargester offer a range of alarm systems to alert the end user to mechanical failure. The installation of such, will be required under BS EN-12566.

Unique Design

The Klargester BioDisc® is the only packaged sewage treatment plant utilising Rotating Biological Contactor technology for small domestic applications.
This process offers inherent cost and performance benefits with a low carbon footprint.

Assured Performance

Klargester BioDisc® is a high performance package treatment plant which, in normal domestic situations, will produce effluent qualities of better than 15mg/l BOD, 25mg/l SS and 15mg/l ammonia.

Low Running Costs

Klargester BioDisc® has the lowest running and maintenance costs of any packaged treatment plant in its class.
The single home unit requires an annual de-sludge only, the motor rating is 50 watts and routine mechanical maintenance is minimal.

Low Lifetime Costs

Lowest running costs combined with the quality and durability of the equipment - particularly the drive motor which has a considerably longer service life than the pumps and blowers fitted to competitive units - all add up to a significantly lower lifetime cost for the Klargester BioDisc®.

Process Stability

The Klargester BioDisc® is recognised for its process performance. This is further enhanced by it's unique Managed Flow System, which ensures optimum performance by smoothing peak flows and buffering biological loads over the whole working day.

Low Profile Covers

Access for service and maintenance is provided via a durable, unobtrusive cover at ground level.

** BA model BioDisc® - prices subject to local supplier.*

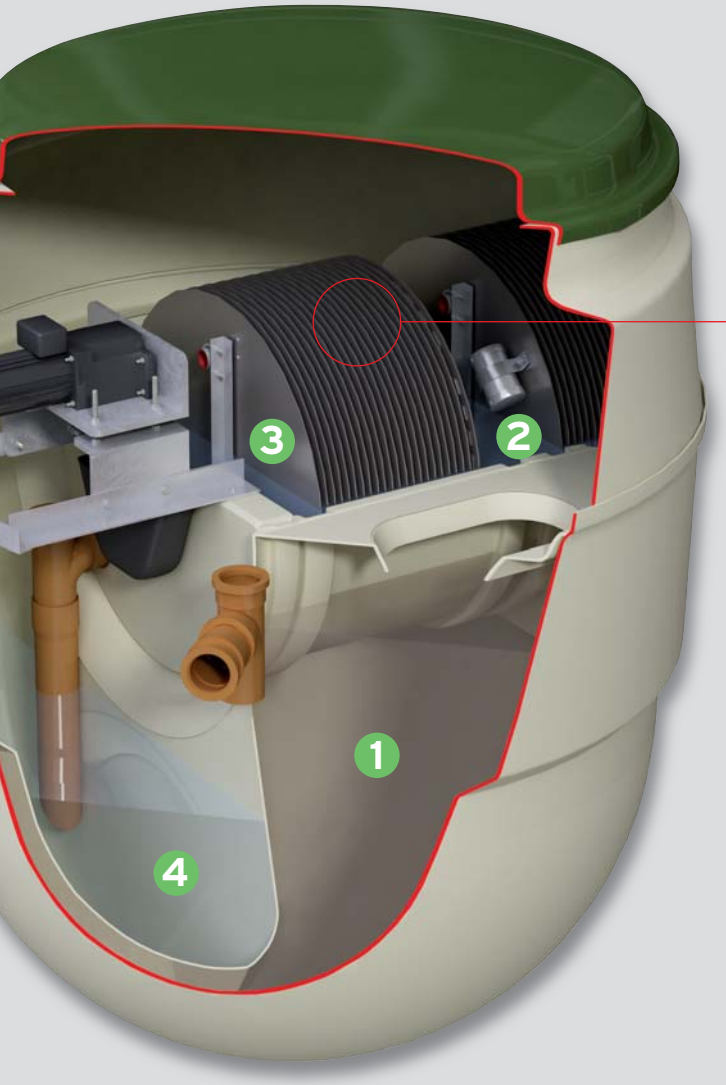

How the Klargester BioDisc® Works

Central to the operation of each Klargester BioDisc® is the Rotating Biological Contactor (RBC), which supports a biologically active film or biomass on to which aerobic micro-organisms, naturally found in sewage, become established. Natural breakdown of sewage can then occur as described below.

The Breakdown Process

Wastewater and sewage flows into the primary settlement zone 1 where solids are settled out and retained. This accumulated sludge should be drawn out periodically.

Partially clarified liquor containing fine suspended solids flows upwards into the first stage Biozone 2 for breaking down by micro-organisms on the RBC. Suspended solids return to the primary settlement zone and the liquor is transferred to the second stage Biozone 3 for further treatment.

Any solids remaining are settled out in the final settlement tank 4. The very high effluent quality is discharged to a watercourse.

Rotating Biological Contactor (RBC)

The RBC comprises banks of vacuum formed polypropylene media supported by a steel shaft. This is slowly rotated by a low energy consumption electric motor and drive assembly.

Note: *The Klargester BioDisc® is designed to deal with normal domestic sewage. If the sewage is likely to contain unusual substances, please consult Klargester.*

Dispersal

Subject to relevant authorities consent and site conditions, the plant discharge can be a watercourse or to a drainage field.

Standard Invert Options

Three standard drain invert level options are available from stock to match the site topography and where applicable, minimise the excavation depth. The Klargester BA, BA-X and BB BioDisc® are available with an integral pump to move effluent from point of treatment if site level demands.

Nationwide Availability

Klargester products can be sourced from your local builders merchant or through local pollution control specialists.

Klargester

Klargester BioDisc® BA-BD

Specification

Unit Size	Single House		Multiple Houses		
	BA	BA-X	BB	BC	BD
Population Equivalent	1 house, up to 4 bedrooms	1 house up to 7 bedrooms	2 houses up to 8 bedrooms	3 houses up to 12 bedrooms	4-5 houses 15-16 bedrooms
Overall Diameter / Width (A) mm	1995	1995	1995	2450	2450
Overall Length (B) mm	-	-	-	-	3340
Standard Drain Invert Inlet (C) mm	750*	750*	750*	600†	600†
Standard Outlet (D) mm	835	835	835	685	685
Depth from Invert to Base (E) mm	1400	1400	1400	1820	1820
Pipework Diameter (mm)	110	110	110	110	110
Sludge Storage Period (approx)	12 months	9 months	6 months	7 months	6 months
Standard Power Supply	Single phase	Single phase	Single phase	Single phase	Single phase
Motor Rating	50W	50W	50W	75W	75W
Weight (tonnes) standard units	0.388	0.418	0.418	0.650	1.100

Applications which include waste disposal units will require special sizing. Please consult Klargester.

* *Optional invert depths of 450mm and 1250mm are available.* † *Optional invert depth of 1100mm is available.*

** *Optional integral pump available in BA, BA-X and BB models*

BioDisc® BA, BA-X, BB and BC

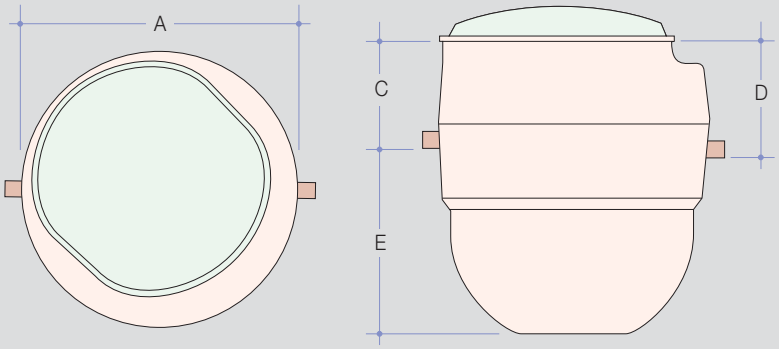

Sizing Your Treatment Plant

The above table is a general guide to selecting the correct Klargester BioDisc® for your property but, with many variables to consider, it is essential to obtain an accurate assessment.

We are pleased to offer professional advice by adhering to British Water's sizing criteria published in their guidance booklet '*Flows and Loads*'. By following this best-practice, Klargester will ensure you are installing the most suitable BioDisc® model to serve your needs.

BioDisc® BD

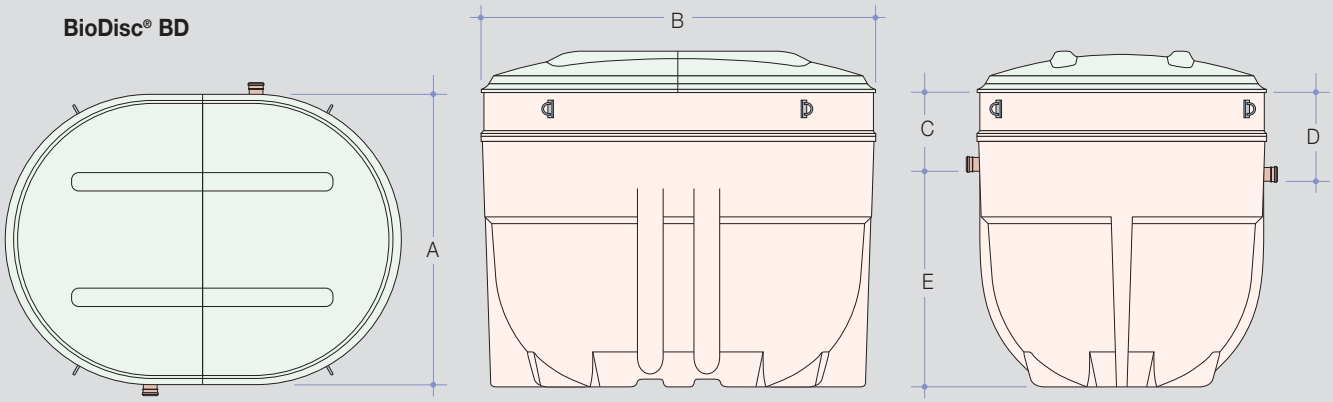

Quick and Easy to Install

Supplied as a complete palletised unit with lifting and lowering fixings, the Klargester BioDisc® is ready for installation on a suitably prepared site. The unit should be stabilised in concrete and the back fill completed with concrete.

We can provide an installation service through our network of Accredited Installers and full details are provided in our comprehensive installation instructions covering all site conditions. Additional technical information sheets are available on the Klargester BioDisc® process, siting, installation, effluent disposal and other specific topics. Please contact Klargester for further information.

Hiab Off-loading

Klargester can provide on-site mechanical off-loading if required (subject to location), please enquire.

Complete Monitoring and Control

Klargester's high-tech control panel features an alarm and digital read-out display, providing the homeowner with an immediate alert should any problem occur.

The control panel 1 is able to communicate the nature of any fault, including loss of disc rotation*, pump failure*, or power failure. The display will inform the householder, or maintenance representative on site via a digital display and fault code. The system also features a highly visible external beacon 2 (optional) as a primary warning.

The control panel has a facility for telemetry to be fitted (supplied by others) to enable remote fault diagnosis by service engineer.

Alarms are now required for sewage treatment plants in the event of a power failure.

EN 12566-3 Section 6.0 para 6.1.1 states:

"Plants shall be provided with an alarm to indicate operational failure (for example electrical, mechanical or hydraulic failure). The manufacturer shall indicate which kind of failure is detected with the alarm."

* Optional sensor fitments.

The new control and alarm panels offer a range of features and benefits including:

- Digital display with fault code to speed up fault diagnosis
- Rapid wiring installation
- Facility for optional telemetry to be fitted
- Flasher beacon available if required (optional).

Sample Chambers

When a treatment plant discharges into a watercourse, it is a regulatory requirement to have a sampling point so that the effluent quality can be periodically checked by regulatory bodies.

Available to suit all outlet depths of our standard ranges, a Kingspan Environmental sample chamber provides the solution, enabling both quick installation and easy access for accurate and convenient effluent testing.

Solutions for All Your Off-mains Needs

Klargester has a sewage treatment solution to meet a wide range of requirements, from single house treatment plants to larger industrial/commercial and community developments:

- Individual houses (of all sizes)
- Off-mains developments of various sizes (housing, commercial, industrial)
- Offices and commercial properties
- Upgrading existing septic tank systems

If you already have a septic tank and would like to upgrade to a sewage treatment plant, we can meet your requests. The company has the expertise and experience in upgrading to biological treatment plants and has a network of Certified Installers that can carry out the work effectively and efficiently.

If you must pump sewage to the mains, we can supply you with a pump station to meet your requirements. Please contact Klargester for further details.

Klargester Reed Beds

What is a Reed Bed?

A reed bed is a filtration process used in conjunction with a Klargester BioDisc® treatment plant to further enhance the quality of the effluent migrating into a drainage field or surrounding watercourse.

Benefits

- Tertiary treatment for new applications with tight discharge consents
- Satisfies new building regulations
- Improved effluent quality for existing works
- Very low maintenance
- Aesthetically pleasing and environmentally friendly
- Easy to install and maintain
- Significantly improves discharge after a treatment plant

Design

- Advanced Patented design delivers superior performance
- Pre-fabricated to ensure correct sizing
- Modules designed with a hydraulic gradient across the length of the units
- Performance tested in Germany to EN12566-3 in combination with a Part 3 plant
- Adjustable outlet weir allows water level control
- Modular system comprising of:
  2 individual reed beds = Single house application
  4 individual reed beds = Two house application
- One piece GRP moulding installed flush to the ground
- Reeds and GRP beds supplied. Washed pea gravel, 'growing' media by others (not included)
- Effluent discharge is typically improved by at least 50%, providing reduced BOD and suspended solids
- Provides rooting zone depth of 600mm (required by Phragmites Australis)

Specification

Reed Bed	HRB006	HRB012
Population Equivalent	6	12*
Length (mm)	2500	2500
Width (mm)	800	800
Depth (mm)	800	800
No. Required	2	4
Outlet Size (mm)	110	110

**12 population equivalent maximum*

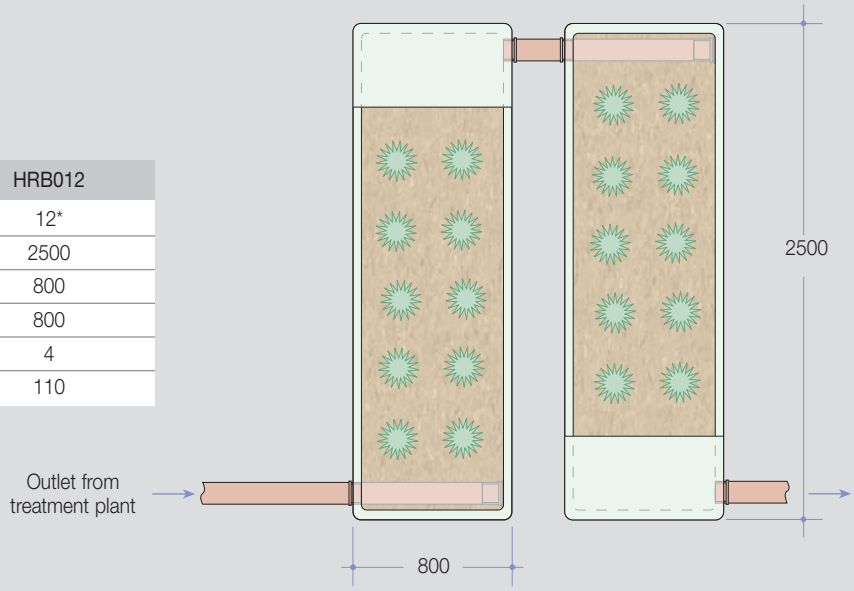

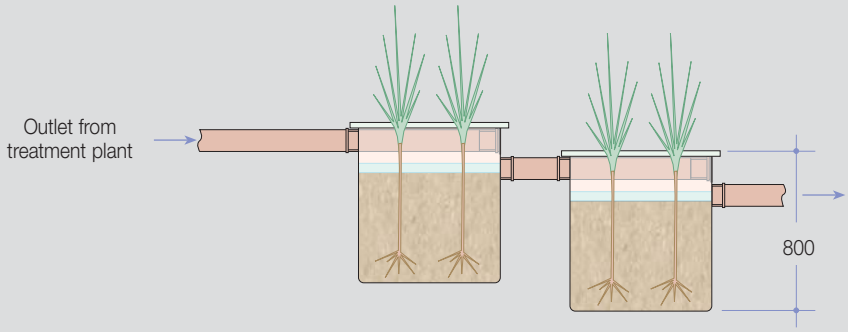

Klargester

The Market Leading Range of Klargester Sewage Treatment, Pumping and Drainage Solutions from Kingspan Environmental

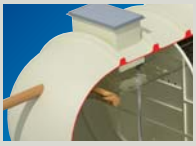
Commercial Sewage Treatment Plants

Large Capacity Pumping Stations

Stormwater Attenuation Systems

Domestic Sewage Treatment Plants

Packaged Pump Systems

Reed Beds

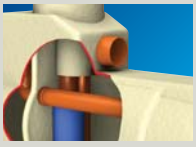
Oil/Water Separators

Septic Tanks

Below Ground Storage Tanks

Grease & Silt Traps

Packaged Drainage Systems

KingspanWater Rainwater Harvesting Solutions

Residential & Commercial Rainwater Harvesting

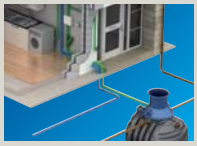
Domestic Rainwater Harvesting

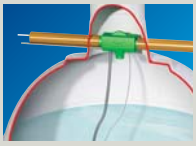
Garden Watering Systems

Kingspan Environmental Accredited Installers

Strategically located throughout the UK and Ireland, Kingspan Environmental Accredited Installers are appointed following a selection process which assesses their installation expertise, reputation and financial status.

These performance criteria, together with their design skills and knowledge of Kingspan Environmental products are also reviewed to ensure that the highest levels of professionalism are maintained.

Larger Applications

Klargester also manufactures BioDisc® plant to cater for larger applications such as residential developments, caravan sites and hotels.

As specialists in wastewater treatment we are able to provide solutions for many different applications. Please contact us for further information.

Kingspan Environmental Service

Who better to look after your treatment plant than the people who designed and built it?

Kingspan Environmental have a dedicated service division providing maintenance for wastewater treatment products.

Factory trained engineers are available for site visits as part of a planned maintenance contract or on a one-off call out basis.

To find out more about protecting your investment and ensuring peace of mind, contact us on **0845 355 0555** or visit us online at **www.kingspanenvservice.com**

Accredited to
BS EN ISO 9001: 2008
BS OHSAS 18001: 2007

Bord Agrément na hÉireann
Irish Agrément Board
IAB No 01/0094

BRITISH WATER

UK GREEN BUILDING COUNCIL
Founding Member

Issue No. 16: August 2010

Klargester

UK: College Road North, Aston Clinton, Aylesbury, Buckinghamshire HP22 5EW
Tel: +44 (0) 1296 633000 Fax: +44 (0) 1296 633001
Scottish Office: Tel: +44 (0) 1355 248484
email: info@klargester.com

Ireland: Unit 1a, Derryboy Road, Carnbane Business Park, Newry, Co. Down BT35 6QH
NI Tel : +44 (0) 28 302 66799 Fax: +44 (0) 28 302 60046 **ROI** Tel: 048 302 66799 Fax: 048 302 60046
email: info@klargester.ie

Visit our website **www.klargester.com**, or our company website **www.kingspanenv.com**

Mixed Sources
Product group from well-managed forests and recycled wood or fiber
www.fsc.org
© 1996 Forest Stewardship Council
FSC

In keeping with Company policy of continuing research and development and in order to offer our clients the most advanced products, Kingspan Environmental reserves the right to alter specifications and drawings without prior notice.